TecnoStamp

palsés®
maquinaria y herramientas

ED21

TABELLA DI PIEGATURA / BENDING CHART

FORZA NECESSARIA PER PIEGA A 90° IN ARIA DI LAMIERA CON RESISTENZA
FORCE REQUIRED FOR 90° AIR BENDING, SHEET RESISTANCE

R=45 Kg/mmq

T mm	6	8	10	12	16	20	25	32	40	50	63	80	100	125	160	200	250	V
	4	5.5	7	8.5	11	14	17.5	22	28	35	45	55	71	89	113	140	175	B
	1	1.3	1.6	2	2.6	3.3	4	5	6.5	8	10	13	16	20	26	33	41	Ri
0.5	3																	
0.6	4	4																
0.8	7	5	4															
1	11	8	7	6														
1.2	16	12	10	8	6													
1.5		17	15	13	9	8												
2			27	22	17	13	11											
2.5				35	26	21	17	13										
3					38	30	24	19	15									
4						54	42	34	27	21								
5							67	52	42	33	26							
6								75	60	48	38	30						
8									107	85	68	53	43					
10										134	105	85	67	53				
12											153	120	96	78	60			F
15												188	150	120	95	75		
20													270	215	170	135	108	t/m

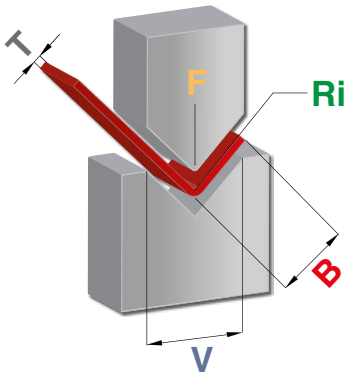

SPESSORE LAMIERA IN MM THICKNESS OF THE SHEET IN MM	T
FORZA IN TON /METRO FORCE IN TON / METER	F
RAGGIO INTERNO INSIDE RADIUS	Ri
BORDO MINIMO POSSIBILE MINIMUM FLANGE LENGHT	B
LARGHEZZA DEL V V-OPENING	V

ALLUMINIO ALUMINIUM	R=20-25 KG/MMQ
ACCIAO DOLCE MILD STEEL	R=40-45 KG/MMQ
INOX STAINLESS STEEL	R=65-70 KG/MMQ

CALCOLO DELLA FORZA PER PIEGA IN ARIA
CALCULATION OF FORCE FOR AIR BENDING

$$F = \frac{T^2 \times 2 \times Ri}{1.4 \times V} = \text{.....} \text{ Tons/mt}$$

RAPPORTO TRA SPESSORE DI LAMIERA E AMPIEZZA DEL V SHEET THICKNESS / V- WIDTH	SPESSORE LAMIERA (mm) SHEET THICKNESS (mm)	0.5 - 2.5	3 - 8	9 - 10	12 OR MORE
	AMPIEZZA DEL V (mm) V - WIDTH (mm)	6 T	8 T	10 T	12 T

LEGENDA DEI MATERIALI
MATERIAL SPECIFICATIONS

	ACCIAIO C45 (UNI EN 10083 W.1. : 1.1191). STEEL C45 (UNI EN 10083 W.1. : 1.1191).
	ACCIAIO C45 (UNI EN 10083 W.1. : 1.1191) TEMPRATO AD INDUZIONE (52/55 HRC) SULLE PARTI USURABILI. STEEL C45 (UNI EN 10083 W.1. : 1.1191) INDUCTION TEMPERED (52-55 HRC) ON WEAR PARTS.
	ACCIAIO C45 (UNI EN 10083 W.1. : 1.1191) BONIFICATO R=80-85 KG/MMQ TEMPRATO AD INDUZIONE (52/55 HRC) SULLE PARTI USURABILI. STEEL C45 (UNI EN 10083 W.1. : 1.1191) HARDENED R=80-85 KG/MMQ INDUCTION TEMPERED (52-55 HRC) ON WEAR PARTS.
	ACCIAIO 42CRMO4 (UNI EN 10083 W.1. : 1.7225) BONIFICATO R=95-105 KG/MMQ TEMPRATO AD INDUZIONE (52/55 HRC) SULLE PARTI USURABILI. STEEL 42 CRMO4 (UNI EN 10083 W.1. : 1.7225) HARDENED R=95-105 KG/MMQ INDUCTION TEMPERED (52-55 HRC) ON WEAR PART.

TRATTAMENTI TERMICI HARDENED TREATMENT	GLI UTENSILI STANDARD E SPECIALI SONO TEMPRATI AD INDUZIONE SULLE PARTI USURABILI A 52-55 HRC. THE STANDARD AND SPECIAL TOOLS ARE INDUCTION HARDENED TO 52-55 HRC ON WEAR PARTS.
TRATTAMENTI ANTIUSURA ANTIWEAR TREATMENT	A RICHIESTA DEL CLIENTE, SUGLI UTENSILI COSTRUITI IN 42CRM04, PUÒ ESSERE FATTO UN TRATTAMENTO ANTIUSURA DI NITRURAZIONE. ON REQUEST ON THE TOOLING IN 42CRM04 TECNOSTAMP CAN MAKE AN ANTIWEAR-NITRIDING TREATMENT.
TRATTAMENTI ANTIRUGGINE RUSTING TREATMENT	A RICHIESTA DEL CLIENTE SUGLI UTENSILI PUÒ ESSERE FATTO IL TRATTAMENTO ANTI RUGGINE DI ZINCATURA. AN ANTI RUST-GALVANIZED TREATMENT CAN BE MADE ON TOOLS ON REQUEST.

pilses maquinaria y herramientas

AMADA - PROMECAM STYLE

PUNZONI

PUNCHES

pilses®
maquinaria y herramientas

RED LINE

AMADA - PROMECAM STYLE

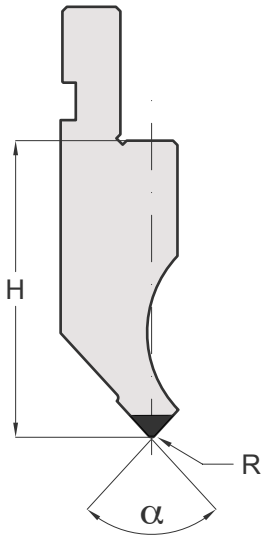

CODE
70.946

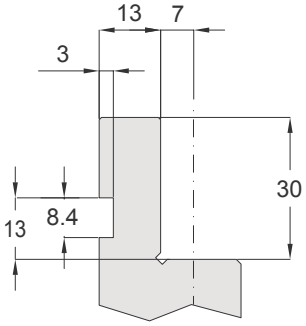

STANDARD

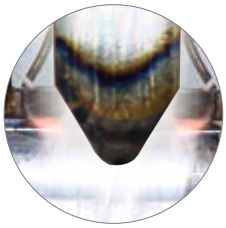

TEMPRA AD INDUZIONE 52-55 HRC
INDUCTION HARDENED 52-55 HRC

LEGENDA	α = ANGOLO	R = RAGGIO	H = ALTEZZA
LEGEND	α = ANGLE	R = RADIUS	H = HEIGHT

SCANALATURA DI SICUREZZA SU RICHIESTA
SAFETY GROOVE ON REQUEST

CODE
70.500

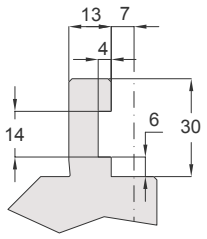

EURO - BEYELER

CODE
70.501

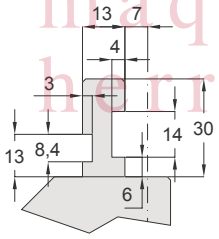

EUROBEYELER - EURO WILA

CODE
70.502

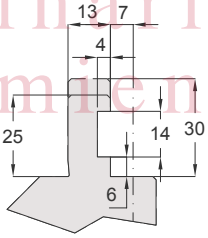

DONEWELL - SAFAN - EUROBEYLER

CODE
70.504

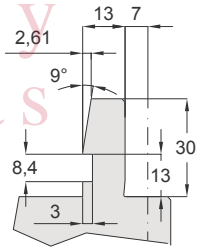

AMADA ONE TOUCH

CODE
70.600

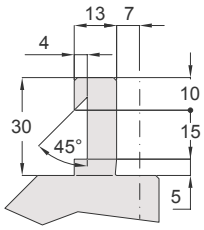

GASPARINI

CODE
70.946

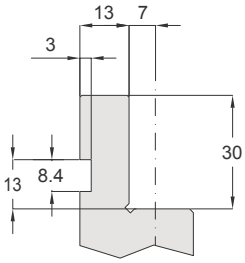

AMADA / PROMECAM

CODE
70.947

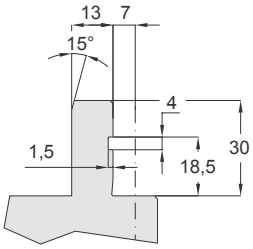

COLGAR OLD STYLE

CODE
70.948

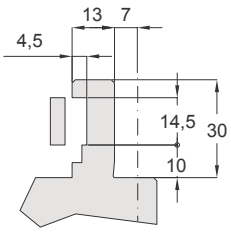

AMADA OLD STYLE

CODE
70.949

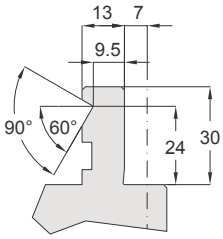

AMADA - BMB IDRAULIC

CODE
70.1050

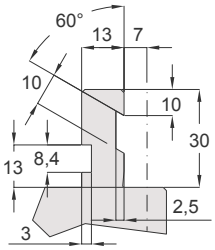

AMADA - PROMECAM (CLARK)

pilses® maquinaria y herramientas

PUNZONI / PUNCHES AMADA - PROMECAM STYLE

I PUNZONI STANDARD SONO DISPONIBILI A MAGAZZINO NELLE LUNGHEZZE DI: 415 / 835 E FRAZIONATI (805 mm)
THE PUNCHES ARE AVAILABLE IN THE FOLLOWING STANDARD LENGTHS: 415 / 835 AND SECTIONED (805 mm)

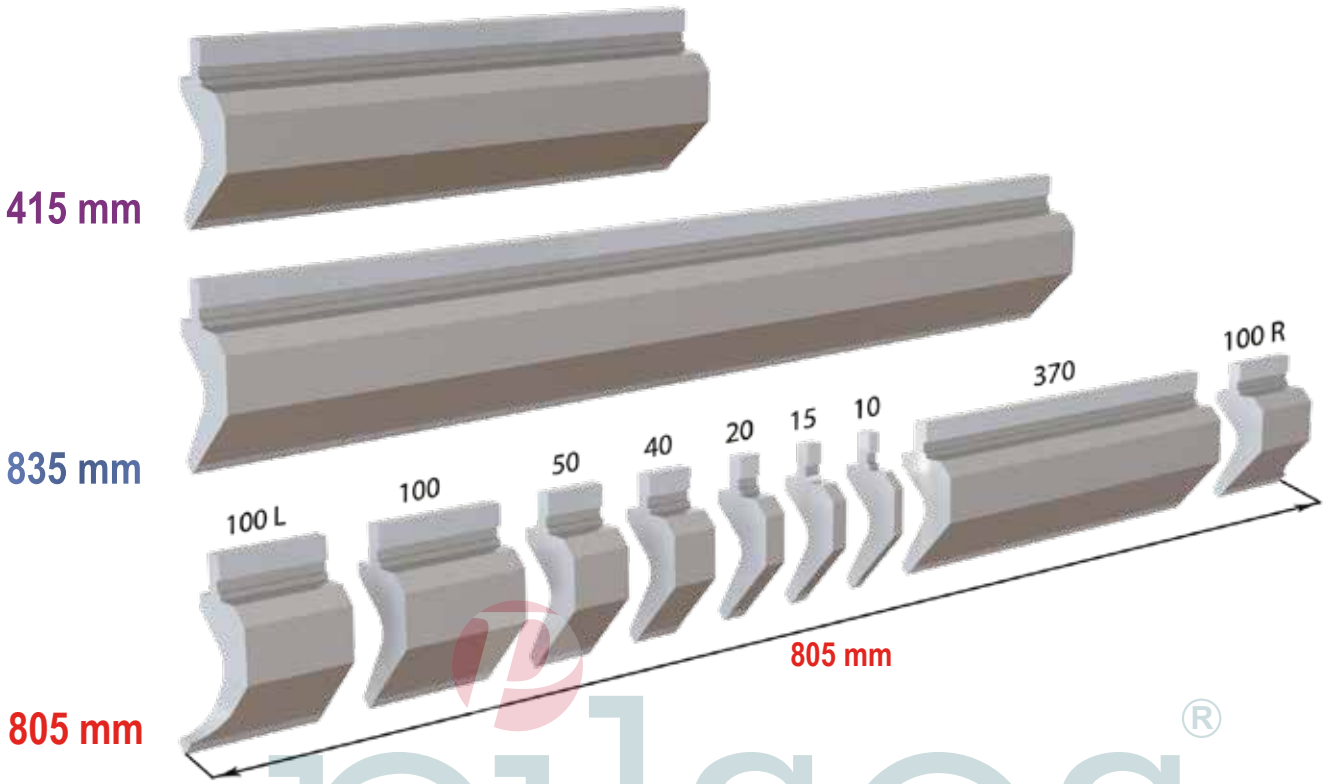

IL CARICO MASSIMO DELLE SCARPETTE CORRISPONDE AL 50% DEL CARICO MASSIMO INDICATO SUL PUNZONE.
THE MAX LOAD OF THE HORN EXTENSIONS IS 50% OF THE MAX LOAD OF THE PUNCH.

pilses® maquinaria y herramientas

CODE							
10.142	10.262	10.517	11.235	11.228	11.260	11.800	11.858
10.143	10.264	10.520	11.146	11.230	11.270	11.867	11.861
10.153	10.500	10.626	11.147	11.231	11.275	11.868	11.863
10.155	10.502	10.672	11.148	11.232	11.280	11.840	11.864
10.157	10.504	11.101	11.149	11.233	11.650	11.850	11.865
10.170	10.505	11.106	11.151	11.835	11.660	11.853	11.866
10.174	10.506	11.108	11.200	11.240	11.670	11.855	11.869
10.176	10.510	11.145	11.201	11.257	11.680	11.857	11.870

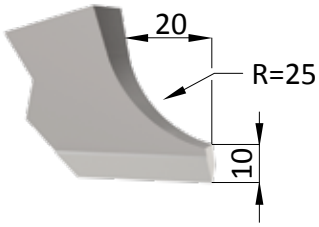

CODE						
10.136	10.515	11.134	11.528	11.710	11.810	11.904
10.511	11.102	11.158	11.530	11.720	11.820	11.911
10.512	11.103	11.258	11.540	11.750	11.830	11.914
10.514	11.104	11.514	11.600	11.780	11.880	11.916

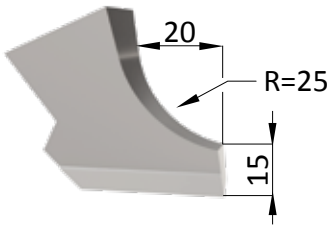

PUNZONI / PUNCHES AMADA - PROMECAM STYLE 75° / 85° / 88°

CODE	α	R	H	T/Mt	Mt
11.101	88°	3.00	65.45	100	
11.145	88°	0.80	66.50	100	
10.153	88°	0.25	66.50	100	
11.201	85°	3.00	65.45	100	
11.200	85°	0.80	66.50	100	
11.853	85°	0.25	66.50	100	
11.275	75°	0.80	67.60	100	

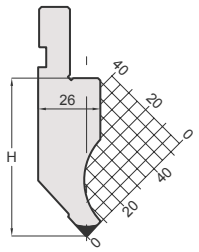

415 mm
835 mm
805 mm
SECTIONED

CODE	α	R	H	T/Mt	Mt
10.176	88°	0.60	66.74	35	
10.174	88°	0.25	66.70	35	
10.170	85°	0.60	66.74	35	
11.857	85°	0.25	67.00	35	

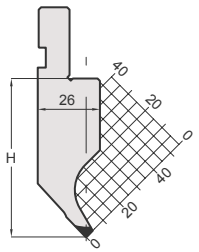

415 mm
835 mm
805 mm
SECTIONED

CODE	α	R	H	T/Mt	Mt
11.870	88°	0.80	135.00	100	
11.232	85°	0.80	135.00	100	

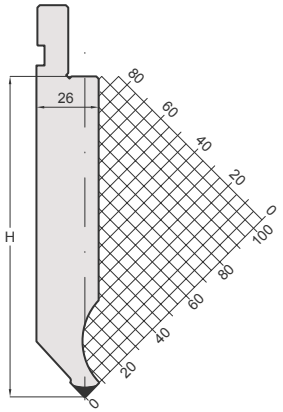

415 mm
835 mm
805 mm
SECTIONED

CODE	α	R	H	T/Mt	Mt
11.228	88°	0.80	105.00	100	
11.231	85°	3.00	105.00	100	
11.230	85°	0.80	105.00	100	

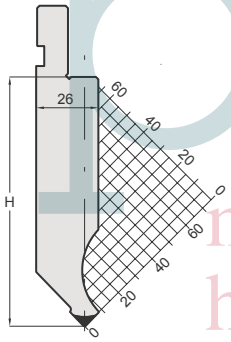

415 mm
835 mm
805 mm
SECTIONED

CODE	α	R	H	T/Mt	Mt
10.262	88°	0.60	100.00	50	
10.264	88°	0.25	100.00	50	
11.861	85°	0.60	100.00	50	
10.626	85°	0.25	100.00	50	

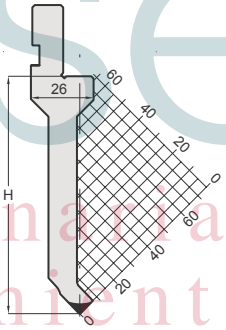

415 mm
835 mm
805 mm
SECTIONED

CODE	α	R	H	T/Mt	Mt
11.858	88°	0.60	135.00	40	
11.855	85°	0.60	135.00	40	

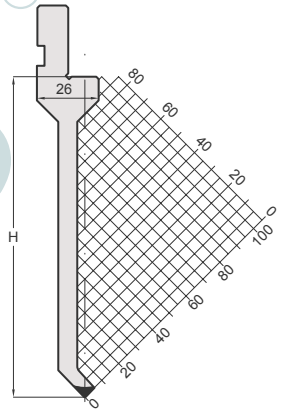

415 mm
835 mm
805 mm
SECTIONED

CODE	α	R	H	T/Mt	Mt
11.260	88°	0.60	95.00	50	
11.257	88°	0.25	95.00	50	
11.270	85°	0.60	95.00	50	

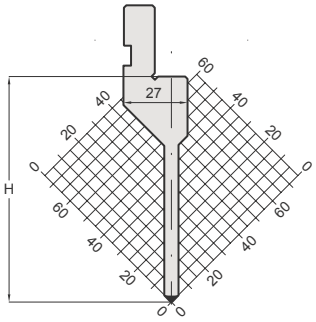

415 mm
835 mm
805 mm
SECTIONED

CODE	α	R	H	T/Mt	Mt
10.260	88°	0.60	95.00	50	
10.257	88°	0.25	95.00	50	

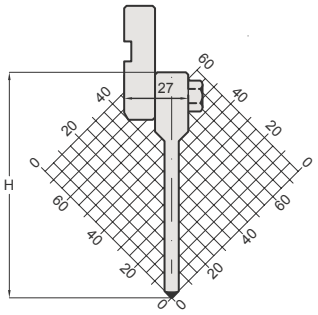

415 mm
835 mm
NON FRAZIONABILE
NOT SECTIONABLE

CODE	α	R	H	T/Mt	Mt
10.504	88°	0.80	104.50	50	
11.650	85°	0.80	104.50	50	
11.868	85°	0.25	104.70	50	

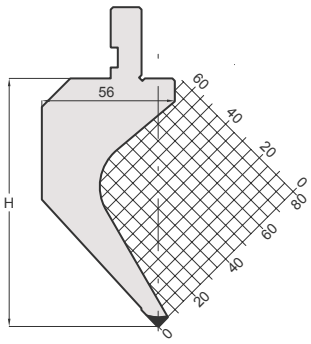

415 mm
835 mm
805 mm
SECTIONED

pilses® maquinaria y herramientas

PUNZONI / PUNCHES AMADA - PROMECAM STYLE 85° / 88°

CODE	α	R	H	T/Mt	Mt
10.502	88°	0.80	89.70	50	
11.865	85°	0.80	89.70	50	
10.672	85°	0.25	90.00	50	

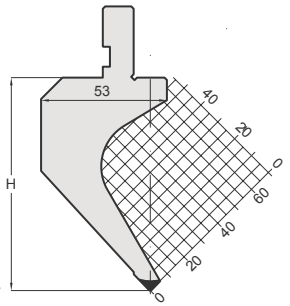

415 mm
835 mm
805 mm
SECTIONED

CODE	α	R	H	T/Mt	Mt
11.108	88°	3.00	103.50	50	
11.147	88°	0.80	104.50	50	
10.157	88°	0.25	104.50	50	
11.866	85°	3.00	103.50	50	
11.151	85°	0.80	104.50	50	
11.867	85°	0.25	104.50	50	

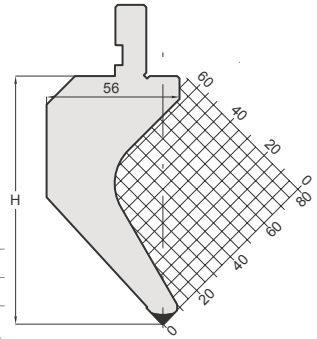

415 mm
835 mm
805 mm
SECTIONED

CODE	α	R	H	T/Mt	Mt
11.106	88°	3.00	88.50	60	
11.146	88°	0.80	89.58	60	
10.155	88°	0.25	89.60	60	
11.863	85°	3.00	88.50	60	
11.660	85°	0.80	89.58	60	
11.864	85°	0.25	89.70	60	

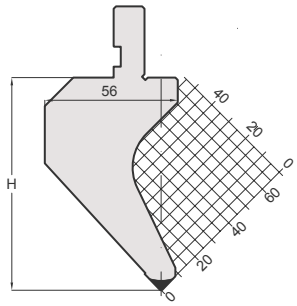

415 mm
835 mm
805 mm
SECTIONED

CODE	α	R	H	T/Mt	Mt
11.235	88°	1.00	120.00	100	

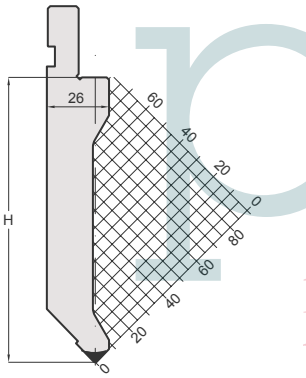

415 mm
835 mm
805 mm
SECTIONED

CODE	α	R	H	T/Mt	Mt
11.670	85°	0.80	145.00	60	

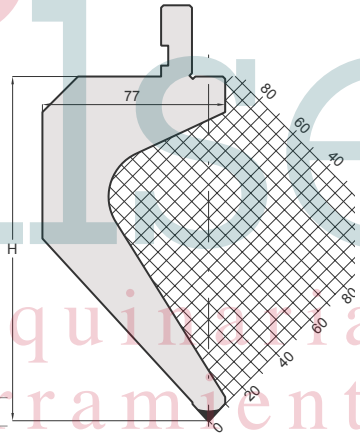

415 mm
835 mm
805 mm
SECTIONED

CODE	α	R	H	T/Mt	Mt
11.149	88°	0.80	165.00	60	
11.849	85°	0.80	165.00	60	

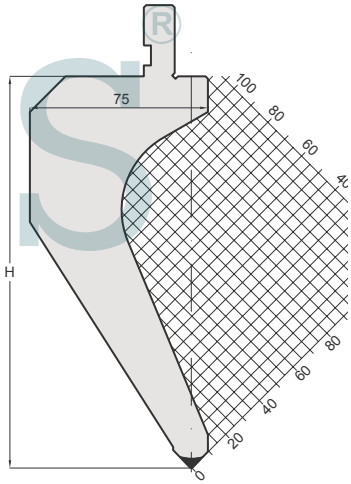

415 mm
835 mm
805 mm
SECTIONED

CODE	α	R	H	T/Mt	Mt
11.148	88°	0.80	145.00	70	
11.848	85°	0.80	145.00	70	

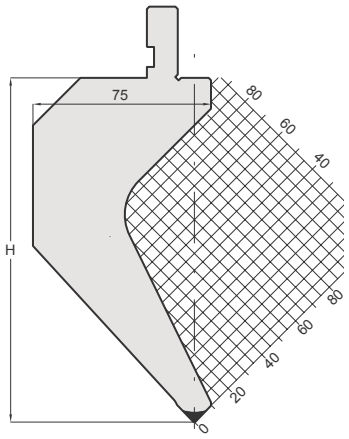

415 mm
835 mm
805 mm
SECTIONED

CODE	α	R	H	T/Mt	Mt
10.512	88°	0.60	84.13	20	

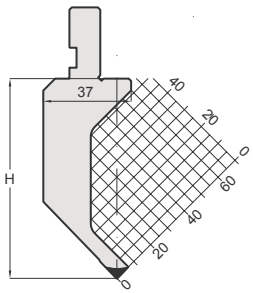

415 mm
835 mm
805 mm
SECTIONED

CODE	α	R	H	T/Mt	Mt
11.830	88°	0.60	85.00	15	

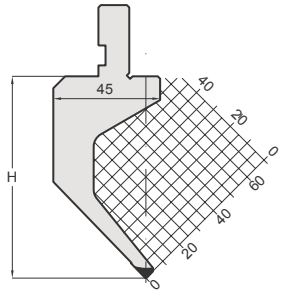

415 mm
835 mm
805 mm
SECTIONED

piles maquinaria y herramientas

PUNZONI / PUNCHES AMADA - PROMECAM STYLE 85°

CODE	α	R	H	T/Mt	Mt
11.840	85°	1.00	185.00	60	

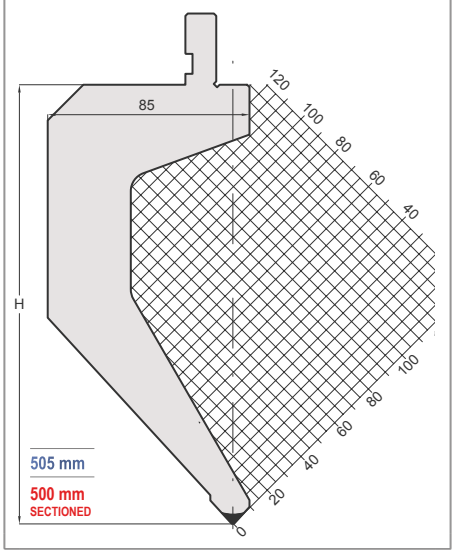

CODE	α	R	H	T/Mt	Mt
11.850	85°	1.00	185.00	40	

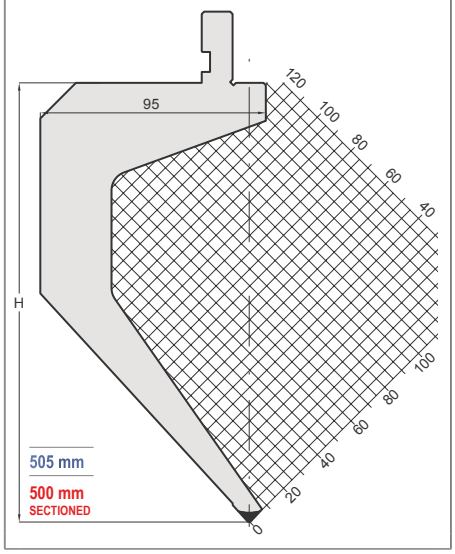

CODE	α	R	H	T/Mt	Mt
11.800	85°	1.00	200.00	70	

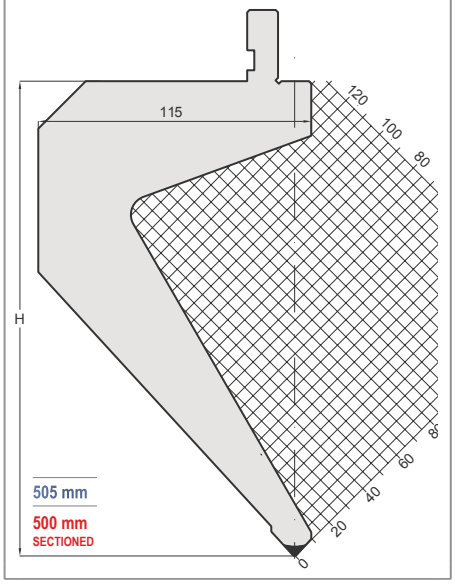

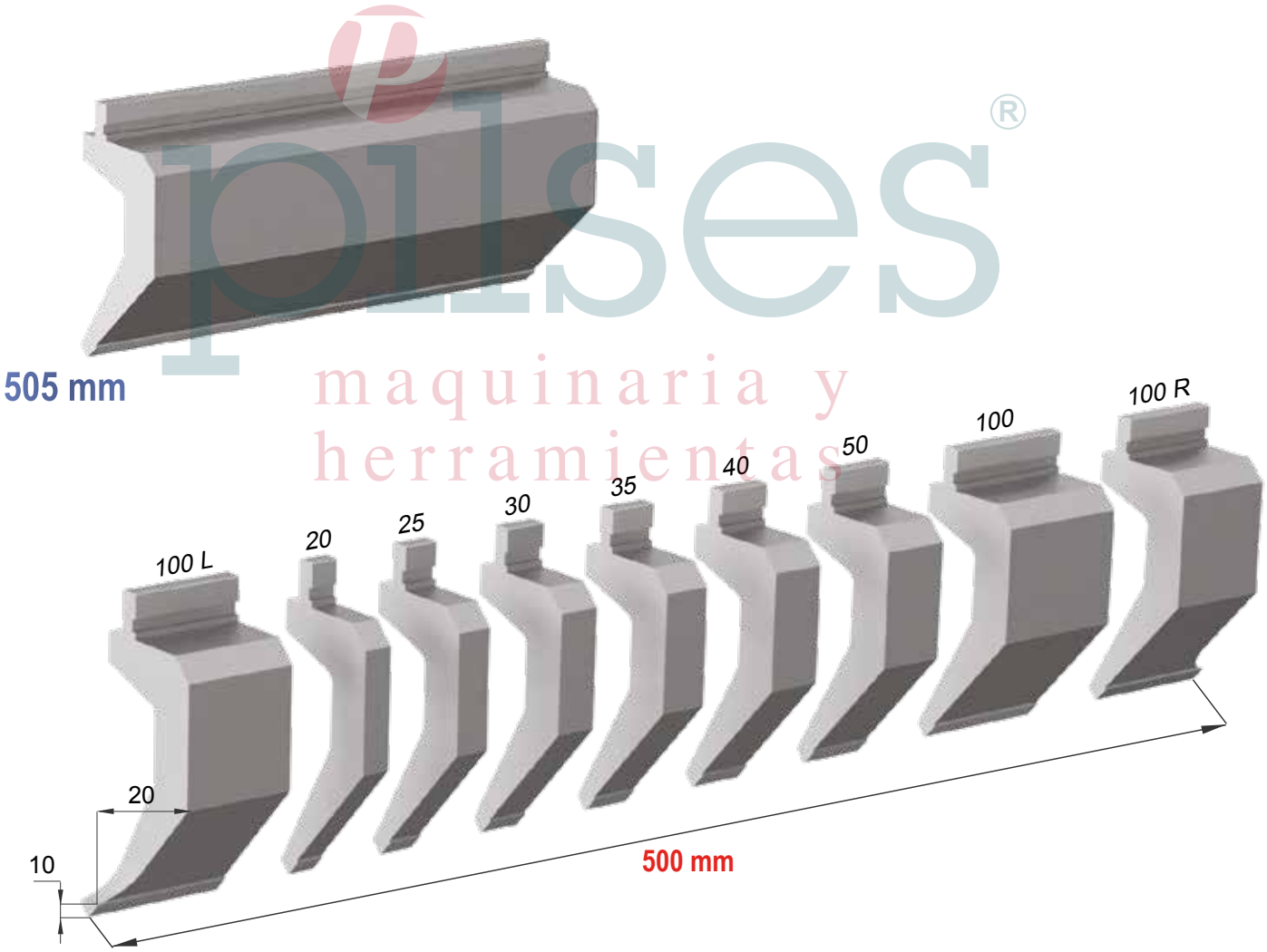

pilses®
maquinaria y herramientas

IL CARICO MASSIMO DELLE SCARPETTE CORRISPONDE AL 50% DEL CARICO MASSIMO INDICATO SUL PUNZONE.
THE MAX LOAD OF THE HORN EXTENSIONS IS 50% OF THE MAX LOAD OF THE PUNCH.

PUNZONI / PUNCHES AMADA - PROMECAM STYLE 60° / 85° / 88°

CODE	α	R	H	T/Mt	Mt
10.505	88°	0.80	120.00	50	
11.835	85°	0.80	120.00	50	

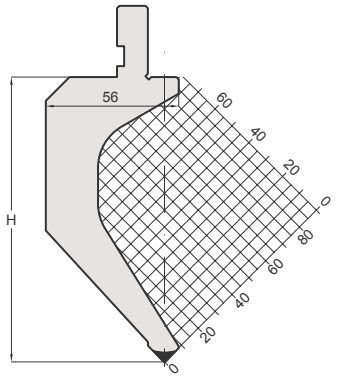

415 mm
835 mm
805 mm
SECTIONED

CODE	α	R	H	T/Mt	Mt
11.820	85°	0.60	115.00	20	

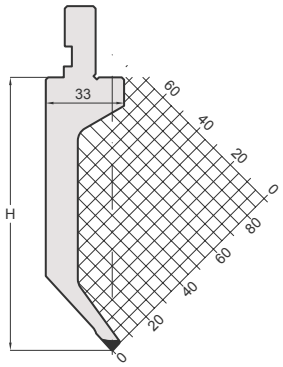

415 mm
835 mm
805 mm
SECTIONED

CODE	α	R	H	T/Mt	Mt
11.680	85°	0.80	145.00	25	

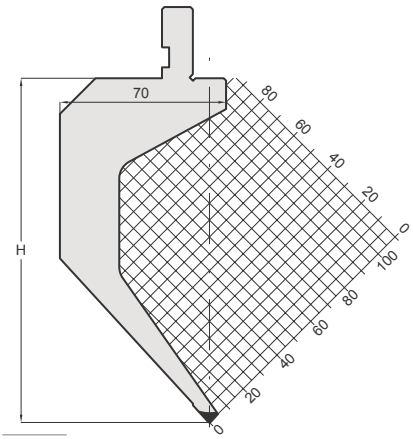

415 mm
835 mm
805 mm
SECTIONED

CODE	α	R	H	T/Mt	Mt
11.240	88°	0.80	66.50	80	

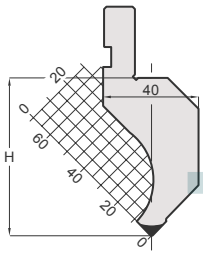

415 mm
835 mm
805 mm
SECTIONED

CODE	α	R	H	T/Mt	Mt
11.233	88°	0.80	105.00	45	
11.869	85°	0.80	105.00	45	

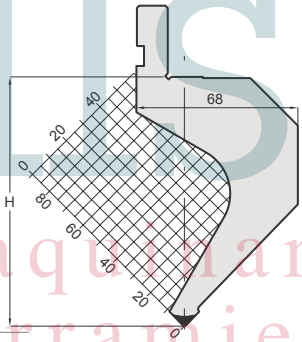

415 mm
835 mm
805 mm
SECTIONED

CODE	α	R	H	T/Mt	Mt
10.516	60°	0.80	85.00	40	

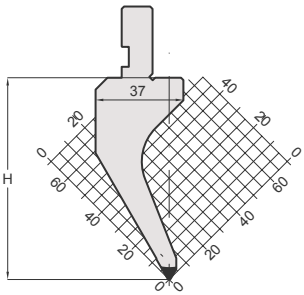

415 mm
835 mm
805 mm
SECTIONED

CODE	α	R	H	T/Mt	Mt
10.143	60°	2.00	65.80	60	
10.142	60°	0.80	67.00	60	

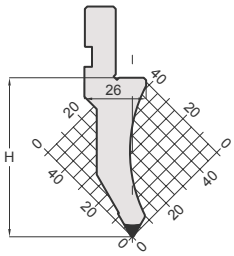

415 mm
835 mm
805 mm
SECTIONED

CODE	α	R	H	T/Mt	Mt
10.500	60°	0.80	115.00	40	

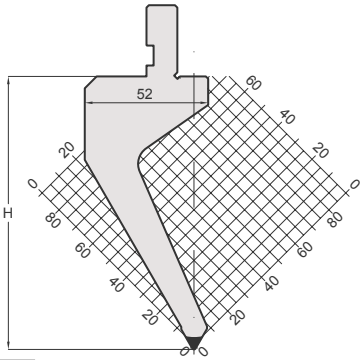

415 mm
835 mm
805 mm
SECTIONED

pilses maquinaria y herramientas

PUNZONI / PUNCHES AMADA - PROMECAM STYLE 45° / 60°

CODE	α	R	H	T/Mt	Mt
10.506	60°	0.80	130.00	40	

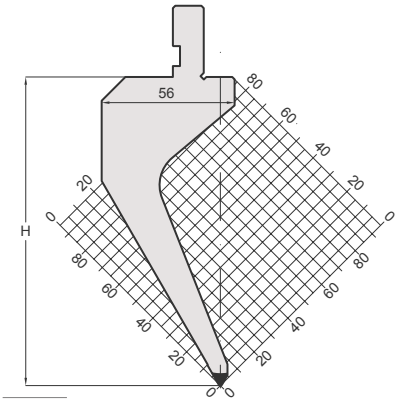

415 mm
835 mm
805 mm
SECTIONED

CODE	α	R	H	T/Mt	Mt
10.517	60°	0.80	80.00	25	

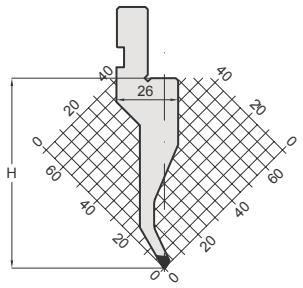

415 mm
835 mm
805 mm
SECTIONED

CODE	α	R	H	T/Mt	Mt
10.510	60°	0.80	115.00	60	

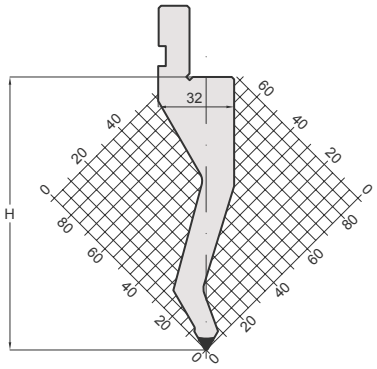

415 mm
835 mm
805 mm
SECTIONED

CODE	α	R	H	T/Mt	Mt
10.520	60°	0.80	115.00	50	

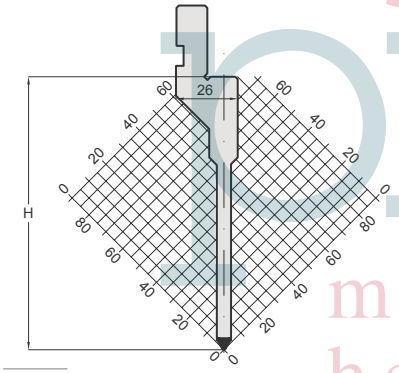

415 mm
835 mm
805 mm
SECTIONED

CODE	α	R	H	T/Mt	Mt
11.750	60°	0.80	135.00	70	

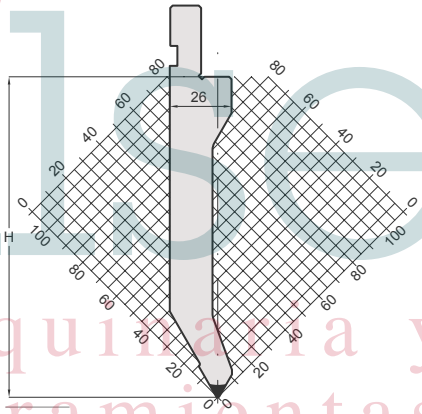

415 mm
835 mm
805 mm
SECTIONED

CODE	α	R	H	T/Mt	Mt
10.136	60°	6.00	65.00	100	

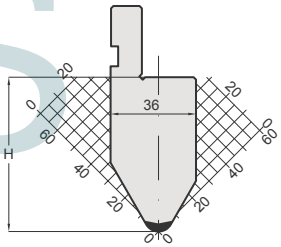

415 mm
835 mm
805 mm
SECTIONED

CODE	α	R	H	T/Mt	Mt
11.710	60°	5.00	115.00	100	

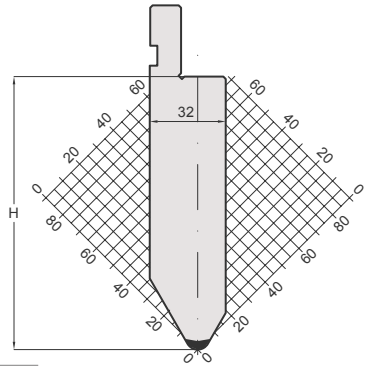

415 mm
835 mm
805 mm
SECTIONED

CODE	α	R	H	T/Mt	Mt
11.720	60°	10.00	115.00	100	

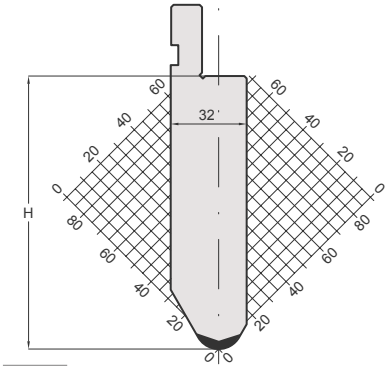

415 mm
835 mm
805 mm
SECTIONED

CODE	α	R	H	T/Mt	Mt
11.134	45°	0.60	66.30	80	
11.102	45°	1.00	65.20	80	

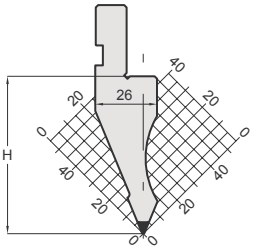

415 mm
835 mm
805 mm
SECTIONED

tolsES®
maquinaria y herramientas

PUNZONI / PUNCHES AMADA - PROMECAM STYLE 30° / 35°

CODE	α	R	H	T/Mt	Mt
11.104	35°	1.50	86.00	70	
11.600	35°	0.80	90.00	70	
11.103	35°	0.60	86.00	70	

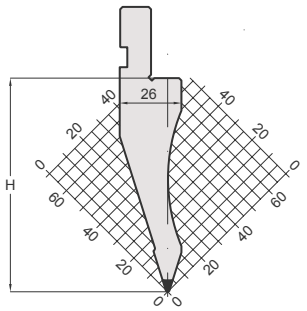

415 mm
835 mm
805 mm
SECTIONED

CODE	α	R	H	T/Mt	Mt
10.514	30°	0.60	80.00	50	

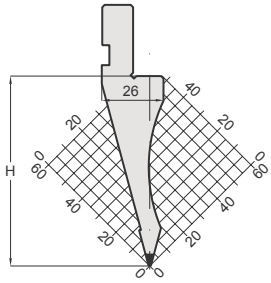

415 mm
835 mm
805 mm
SECTIONED

CODE	α	R	H	T/Mt	Mt
11.514	30°	0.60	104.00	50	

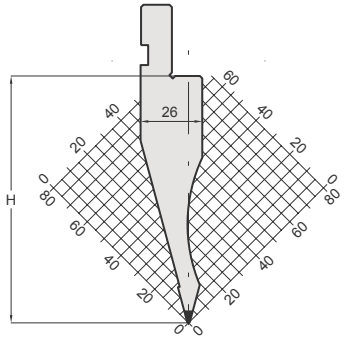

415 mm
835 mm
805 mm
SECTIONED

CODE	α	R	H	T/Mt	Mt
11.258	30°	0.60	104.00	100	

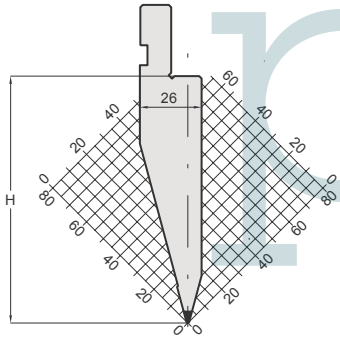

415 mm
835 mm
805 mm
SECTIONED

CODE	α	R	H	T/Mt	Mt
11.158	30°	0.60	80.00	100	

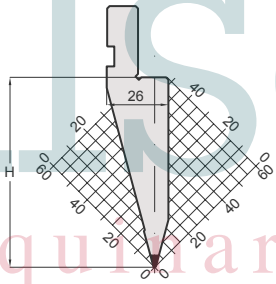

415 mm
835 mm
805 mm
SECTIONED

CODE	α	R	H	T/Mt	Mt
10.511	30°	3.00	80.00	100	

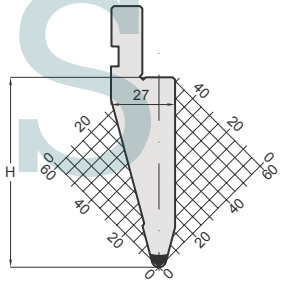

415 mm
835 mm
805 mm
SECTIONED

CODE	α	R	H	T/Mt	Mt
11.530	30°	5.00	104.00	100	
11.528	30°	3.00	104.00	100	

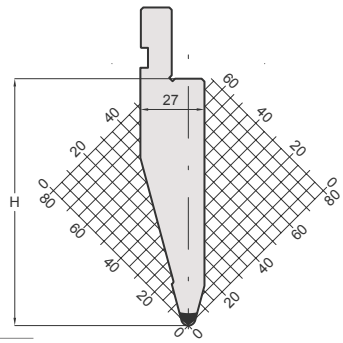

415 mm
835 mm
805 mm
SECTIONED

CODE	α	R	H	T/Mt	Mt
10.515	30°	0.60	140.00	50	

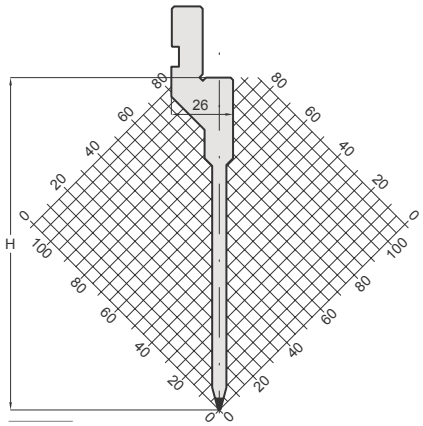

415 mm
835 mm
805 mm
SECTIONED

CODE	α	R	H	T/Mt	Mt
11.280	30°	0.60	95.00	50	

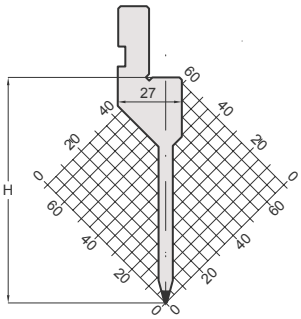

415 mm
835 mm
805 mm
SECTIONED

pilses®
maquinaria y herramientas

PUNZONI / PUNCHES AMADA - PROMECAM STYLE 26° / 30°

CODE	α	R	H	T/Mt	Mt
11.880	30°	0.80	150.00	40	

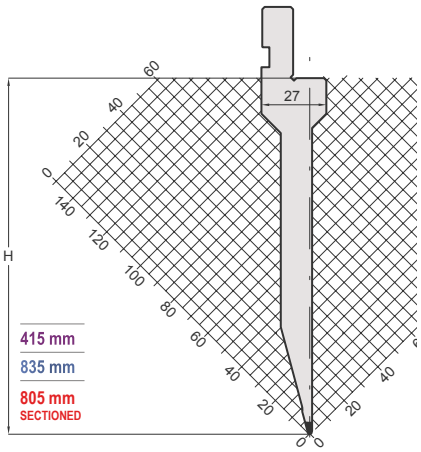

415 mm
835 mm
805 mm
SECTIONED

CODE	α	R	H	T/Mt	Mt
11.810	30°	1.00	200.00	50	

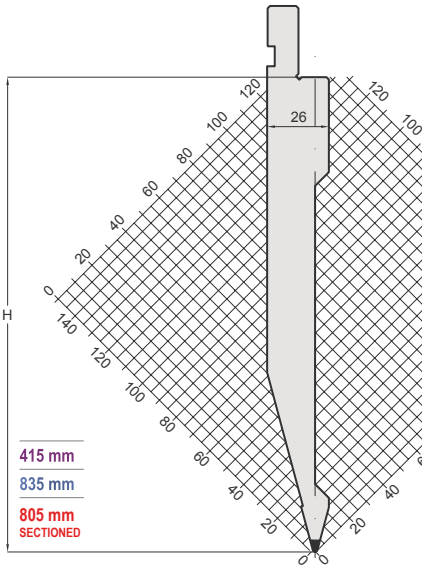

415 mm
835 mm
805 mm
SECTIONED

CODE	α	R	H	T/Mt	Mt
11.904	30°	10.00	83.00	100	

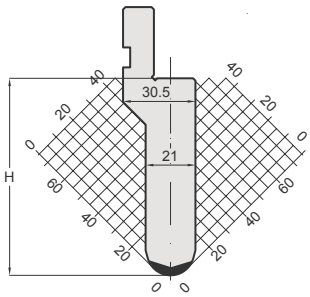

415 mm
835 mm
805 mm
SECTIONED

CODE	α	R	H	T/Mt	Mt
11.911	30°	15.00	87.00	100	

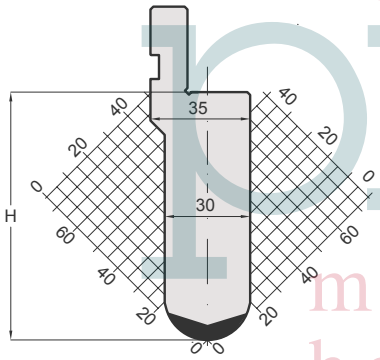

415 mm
835 mm
805 mm
SECTIONED

CODE	α	R	H	T/Mt	Mt
11.914	30°	17.50	89.00	100	

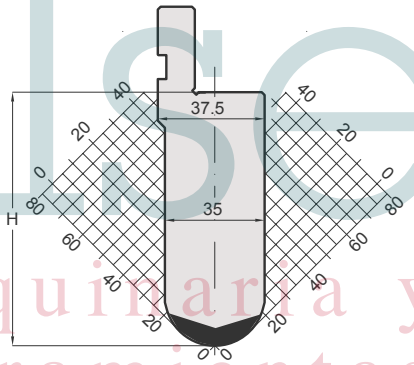

415 mm
835 mm
805 mm
SECTIONED

CODE	α	R	H	T/Mt	Mt
11.916	30°	20.00	91.00	100	

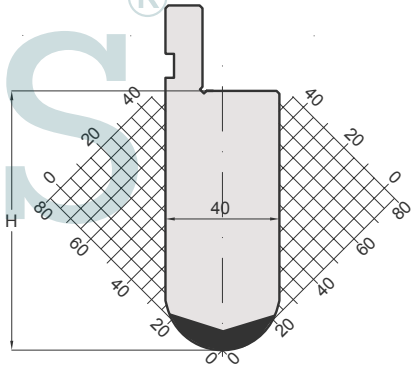

415 mm
835 mm
805 mm
SECTIONED

CODE	α	R	H	T/Mt	Mt
11.780	30°	0.50	135.00	80	

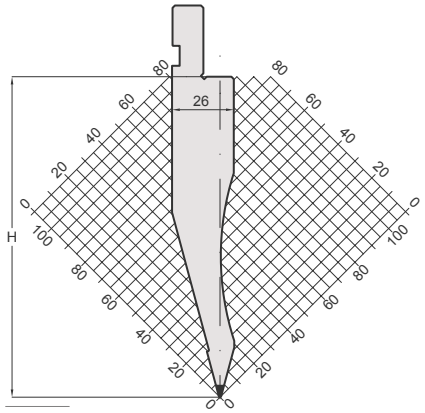

415 mm
835 mm
805 mm
SECTIONED

CODE	α	R	H	T/Mt	Mt
11.540	26°	0.80	117.00	100	

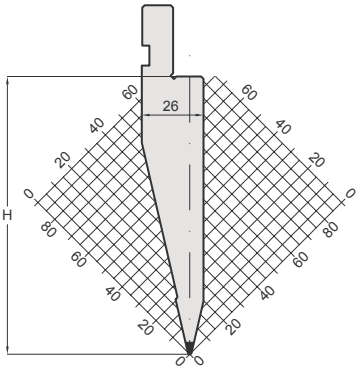

415 mm
835 mm
805 mm
SECTIONED

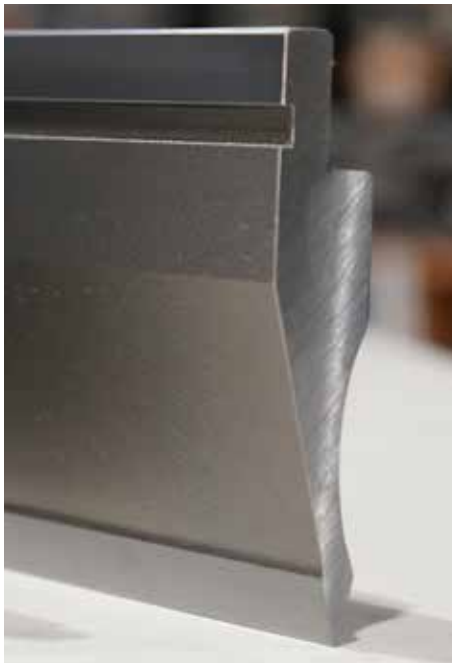

polles® maquinaria y herramientas

AMADA - PROMECAM STYLE

PUNZONE ROTANTE E SCARPETTE MOBILI

ROTARY PUNCH AND MOVING HORNS

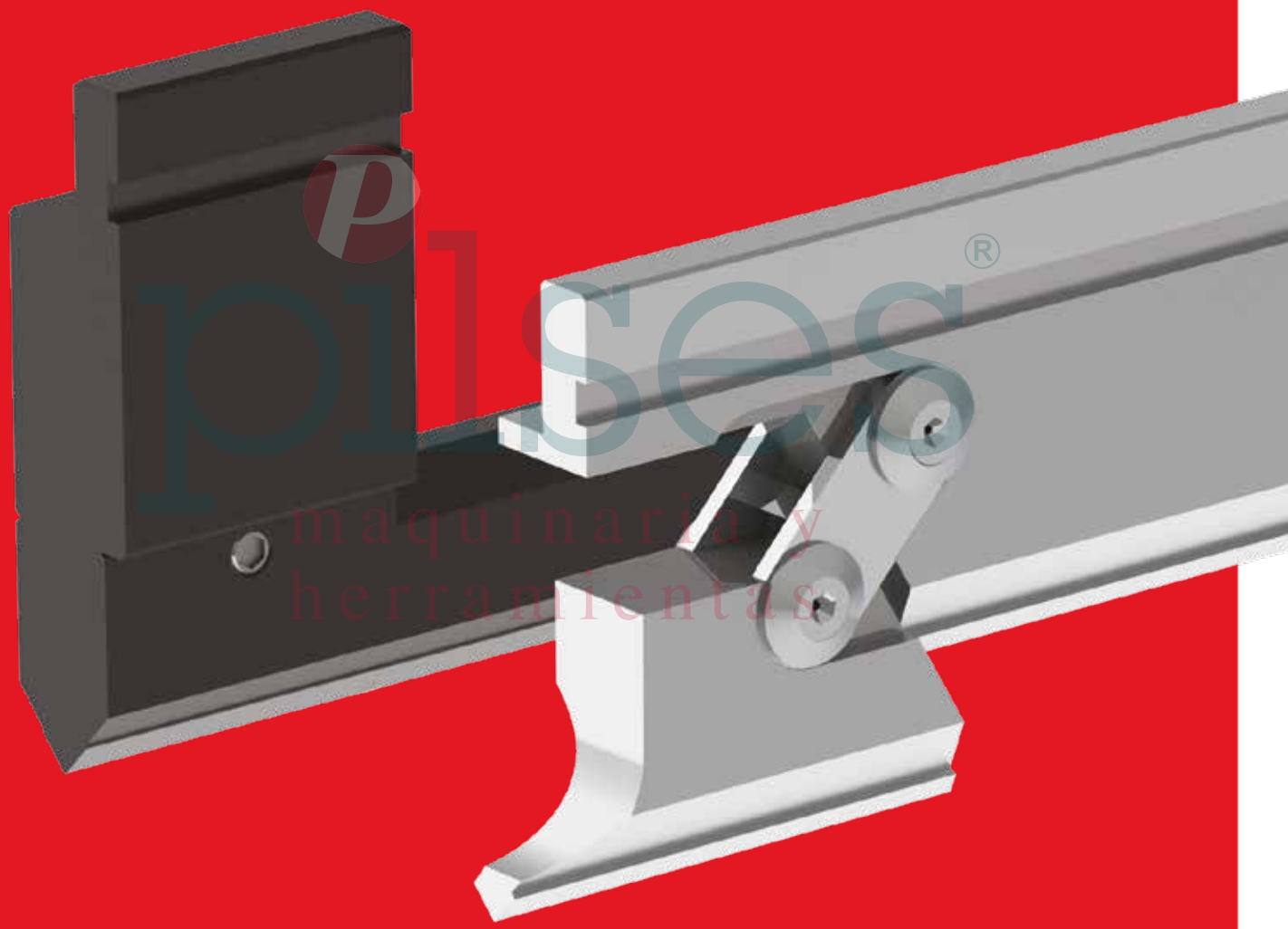

plses® maquinaria y herramientas

RED LINE

AMADA - PROMECAM STYLE

PUNZONE ROTANTE / ROTARY PUNCH AMADA - PROMECAM STYLE

CODE	α	R	H	T/Mt	Mt
40.670	88°	0.80	110.00	15	
40.680	85°	0.80	110.00	15	

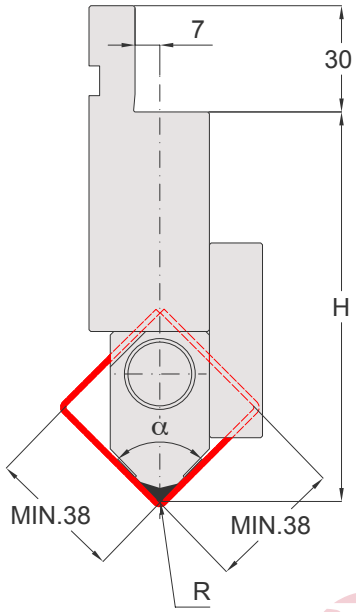

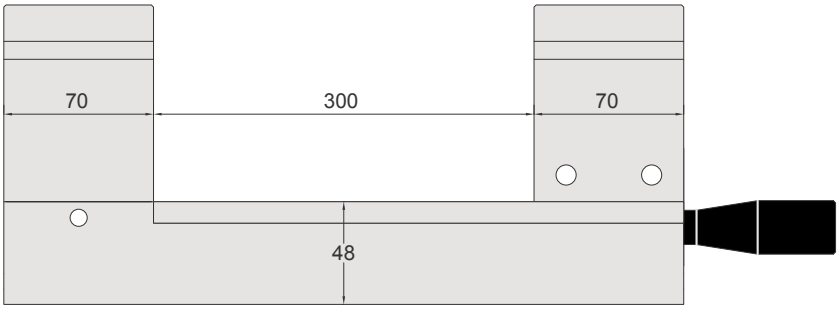

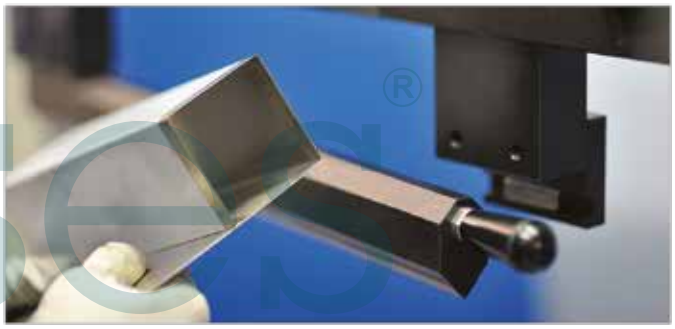

SCARPETTE MOBILI / MOVING HORNS AMADA - PROMECAM STYLE

SCARPETTE MOBILI MOVING HORNS		PUNZONI PUNCHES
40.111	➡	10.153
40.113	➡	11.145
40.114	➡	11.200
40.115	➡	11.101
40.116	➡	11.201
40.121	➡	10.176
40.122	➡	10.170
40.124	➡	10.174

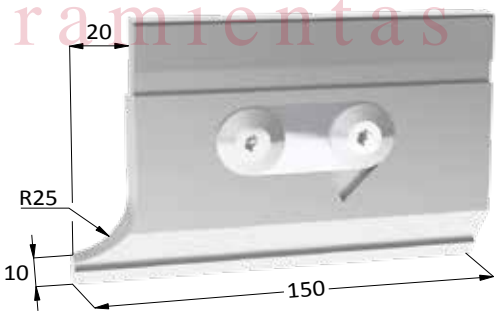

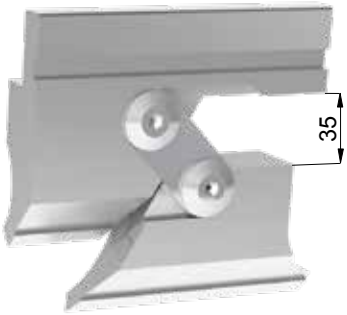

IL CARICO MASSIMO DELLE SCARPETTE CORRISPONDE AL 50% DEL CARICO MASSIMO INDICATO SUL PUNZONE.
THE MAX LOAD OF THE HORN EXTENSIONS IS 50% OF THE MAX LOAD OF THE PUNCH.

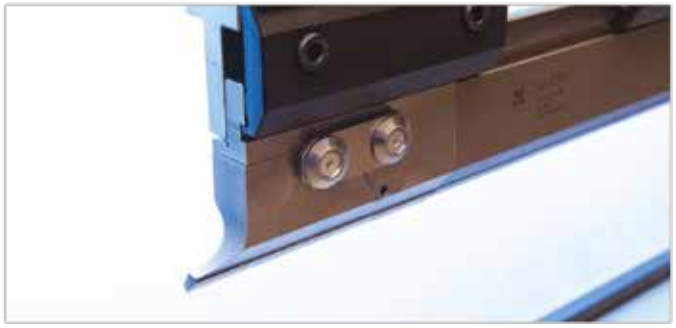

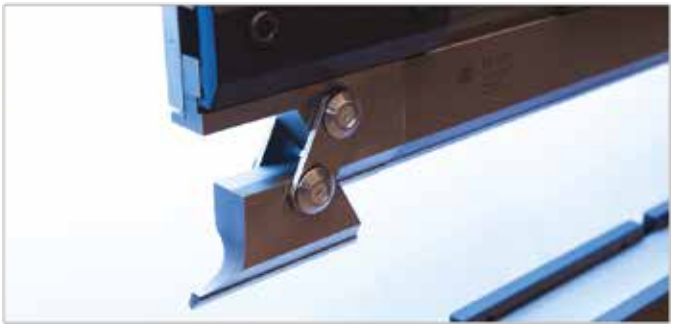

ADATTE ALL'ESECUZIONE DI SCATOLE E IDONEE PER LE ISOLE ROBOTIZZATE
SUITABLE TO BOXES PRODUCTION AND ROBOT BENDING CELLS

Pilsen herramientas

AMADA - PROMECAM STYLE

MATRICI

DIES

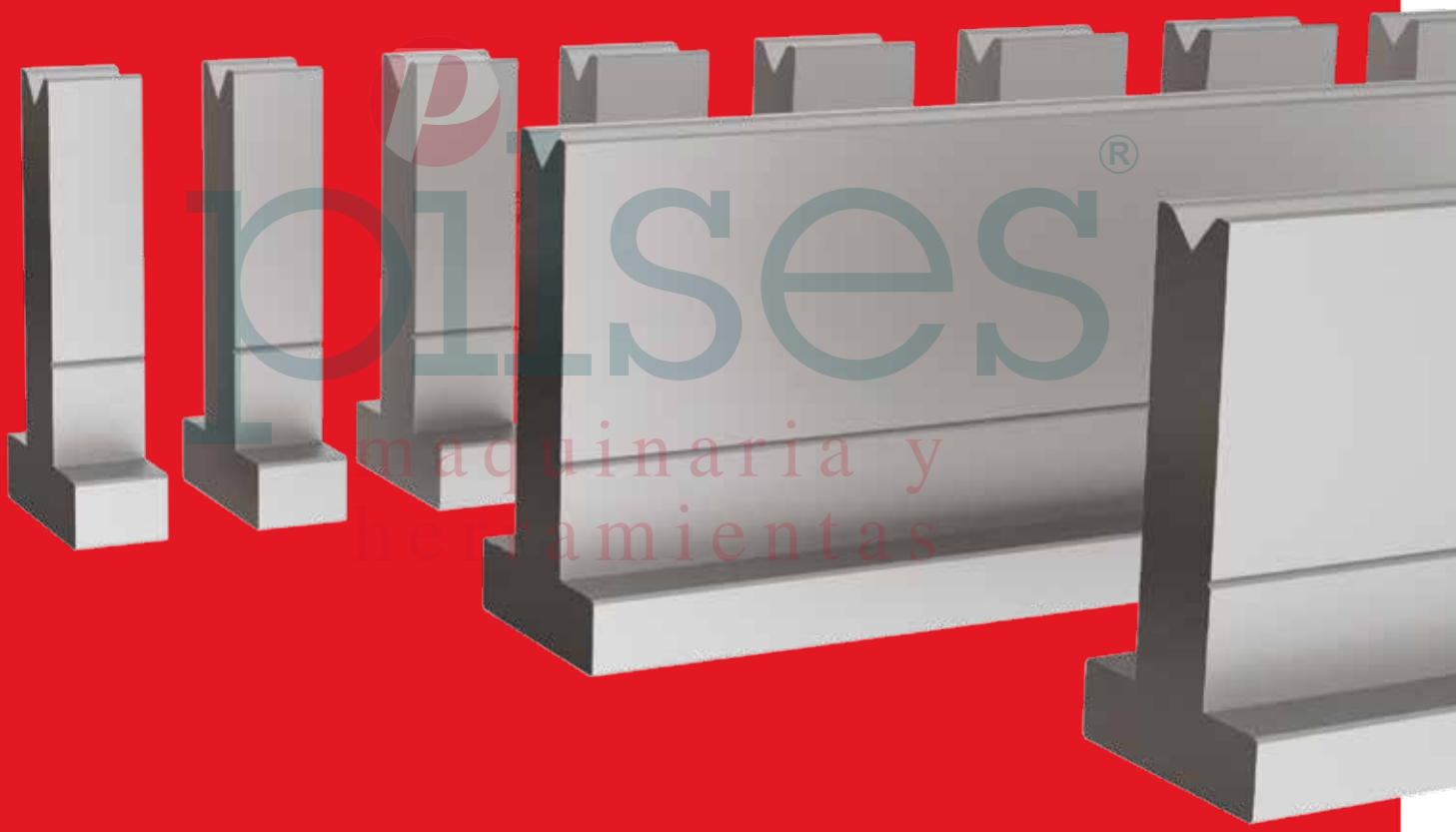

Tolses®
maquinaria y herramientas

RED LINE

AMADA - PROMECAM STYLE

MATRICI / DIES AMADA - PROMECAM STYLE 2V / 4V

LE MATRICI STANDARD SONO DISPONIBILI A MAGAZZINO NELLE LUNGHEZZE DI: 415 / 835 E FRAZIONATI (805 mm)
THE DIES ARE AVAILABLE IN THE FOLLOWING STANDARD LENGTHS: 415 / 835 AND SECTIONED (805 mm)

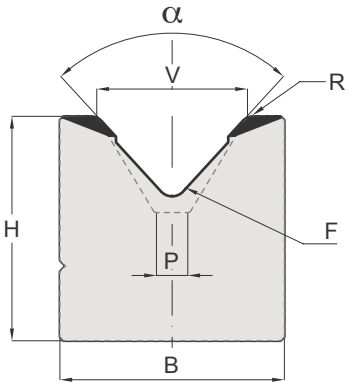

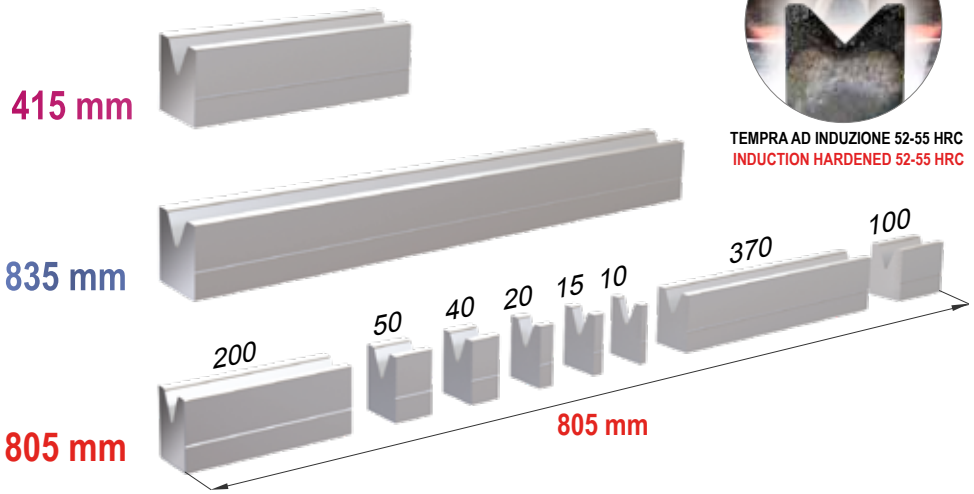

TEMPRA AD INDUZIONE 52-55 HRC
INDUCTION HARDENED 52-55 HRC

LEGENDA	α = ANGOLO	V = AMPIEZZA CAVA	R = RAGGIO	H = ALTEZZA	F = FONDO MATRICE	P = PIANO	B = BASE
LEGEND	α = ANGLE	V = DIE OPENING	R = RADIUS	H = HEIGHT	F = BOTTOM DIES	P = FLAT	B= BASE

CODE	T/Mt	Mt
21.209	100	

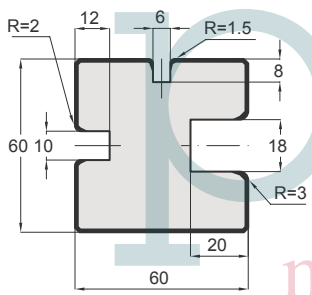

415 mm
835 mm
805 mm
SECTIONED

CODE	α	T/Mt	Mt
20.350	60°	60	

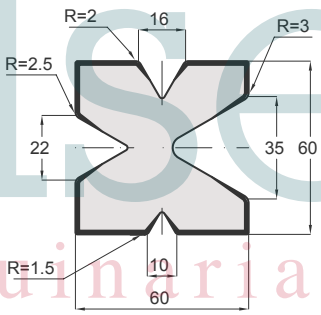

415 mm
835 mm
805 mm
SECTIONED

CODE	α	T/Mt	Mt
21.207	85°	80	

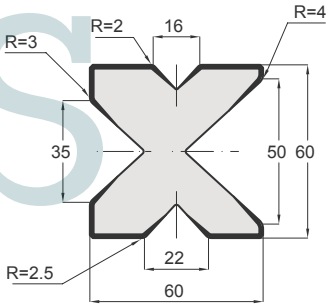

415 mm
835 mm
805 mm
SECTIONED

CODE	α	H	T/Mt	Mt
20.820	85°	80.00	100	

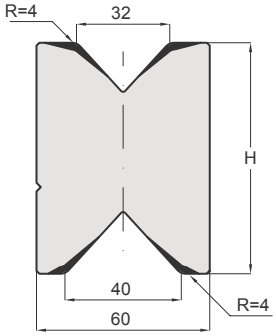

415 mm
835 mm
805 mm
SECTIONED

CODE	α	H	T/Mt	Mt
20.830	30°	80.00	100	

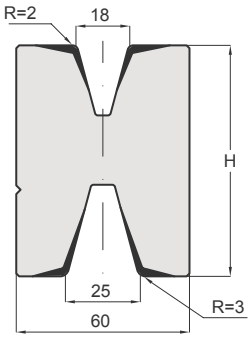

415 mm
835 mm
805 mm
SECTIONED

CODE	α	H	T/Mt	Mt
28.820	60°- 80°	90	80	

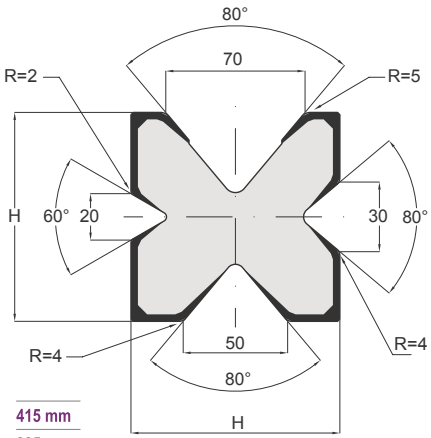

415 mm
835 mm
805 mm
SECTIONED

Pilses® maquinaria y herramientas

CODE	α	V	R	H	T/Mt	Mt
20.494	30°	18	2.00	60.00	100	

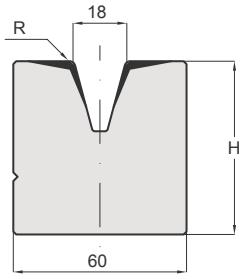

415 mm
835 mm
805 mm
SECTIONED

CODE	α	V	R	H	T/Mt	Mt
20.325	30°	25	3.00	60.00	100	

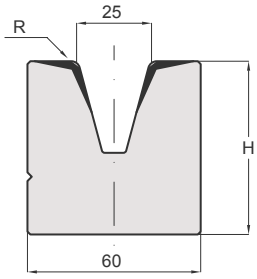

415 mm
835 mm
805 mm
SECTIONED

CODE	α	V	R	H	T/Mt	Mt
20.210	85°	32	4.00	60.00	100	

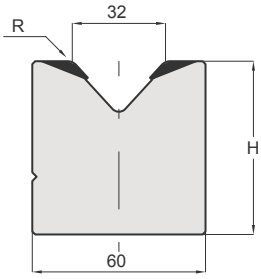

415 mm
835 mm
805 mm
SECTIONED

CODE	α	V	R	H	T/Mt	Mt
20.211	85°	40	4.00	60.00	100	

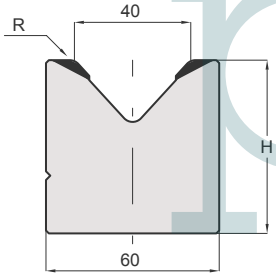

415 mm
835 mm
805 mm
SECTIONED

CODE	α	V	R	H	T/Mt	Mt
20.212	85°	50	4.00	60.00	100	

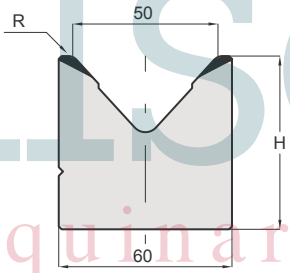

415 mm
835 mm
805 mm
SECTIONED

CODE	α	V	R	H	T/Mt	Mt
20.484	45°	32	4.00	80.00	100	

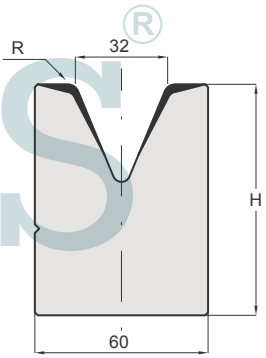

415 mm
835 mm
805 mm
SECTIONED

CODE	α	V	R	H	T/Mt	Mt
20.440	45°	40	4.00	75.00	100	

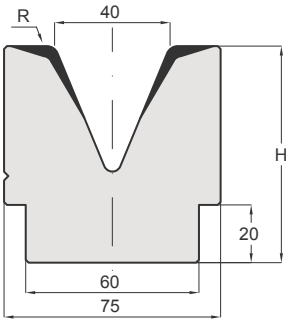

415 mm
835 mm
805 mm
SECTIONED

CODE	α	V	R	H	T/Mt	Mt
20.650	60°	50	5.00	75.00	100	

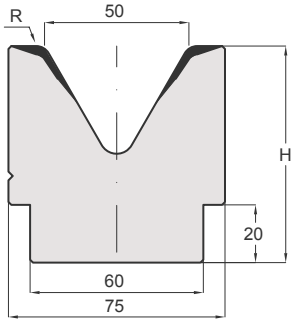

415 mm
835 mm
805 mm
SECTIONED

CODE	α	V	R	H	T/Mt	Mt
20.370	60°	63	5.00	86.00	100	

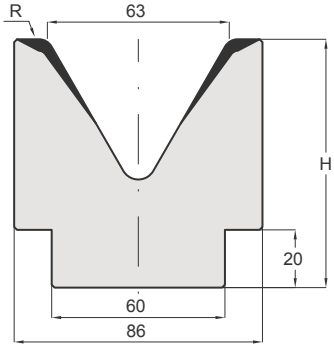

415 mm
835 mm
805 mm
SECTIONED

pilses® maquinaria y herramientas

CODE	α	V	R	H	T/Mt	Mt
20.213	85°	63	5.00	75.00	100	

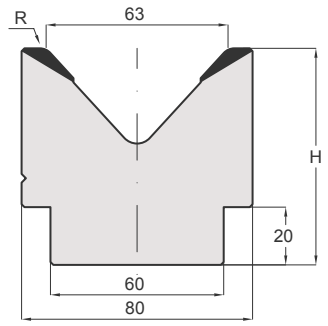

415 mm
835 mm
805 mm
SECTIONED

CODE	α	V	R	H	T/Mt	Mt
20.214	85°	80	6.00	80.00	100	

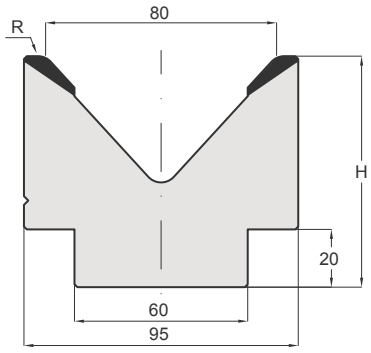

415 mm
835 mm
805 mm
SECTIONED

CODE	α	V	R	H	T/Mt	Mt
20.680	60°	80	6.00	115.00	100	

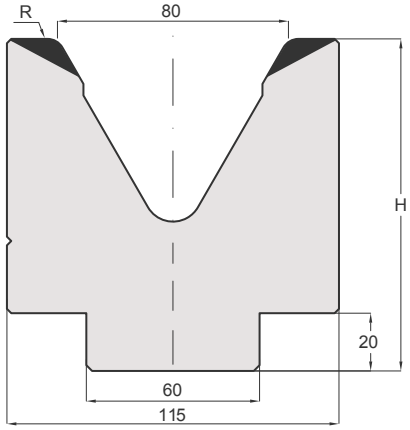

415 mm
835 mm
805 mm
SECTIONED

CODE	α	V	R	H	T/Mt	Mt
20.610	60°	100	10.00	130.00	100	

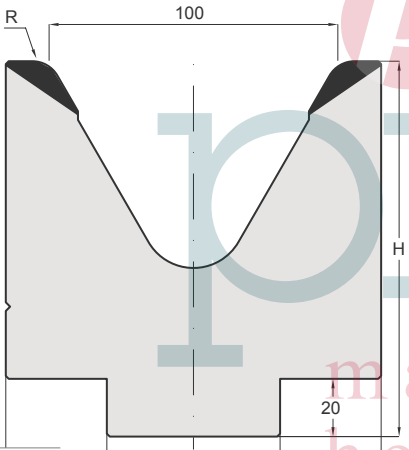

415 mm
835 mm
805 mm
SECTIONED

CODE	α	V	R	H	T/Mt	Mt
20.215	85°	100	7.00	95.00	100	

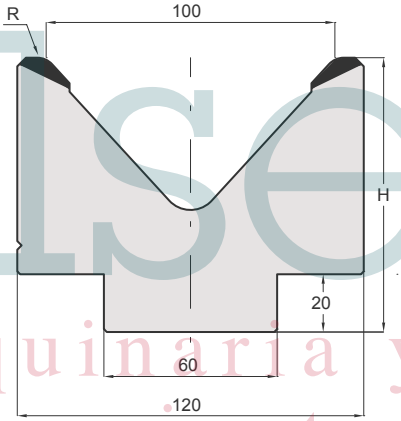

415 mm
835 mm
805 mm
SECTIONED

CODE	α	V	R	H	T/Mt	Mt
20.216	80°	125	9.00	103.00	150	

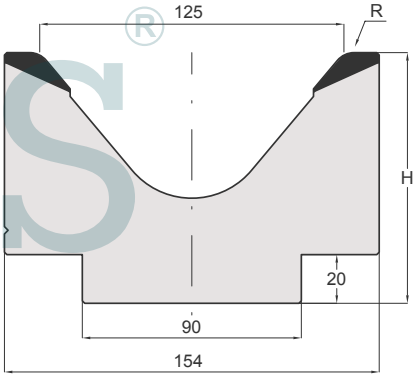

200 mm
415 mm
805 mm
SECTIONED

CODE	α	V	R	H	T/Mt	Mt
20.380	45°	80	6.00	145.00	100	

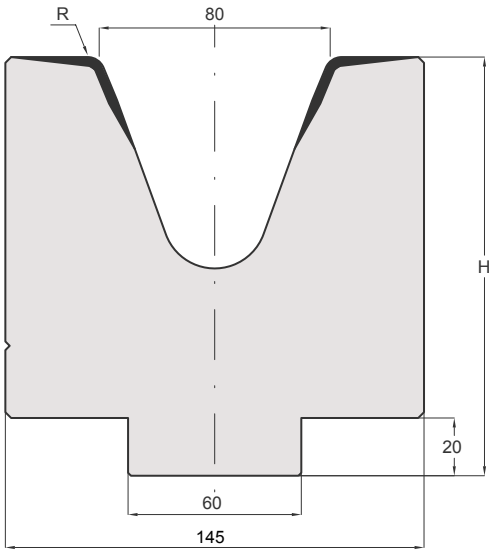

200 mm
415 mm
805 mm
SECTIONED

CODE	α	V	R	H	T/Mt	Mt
20.217	80°	160	10.00	130.00	150	

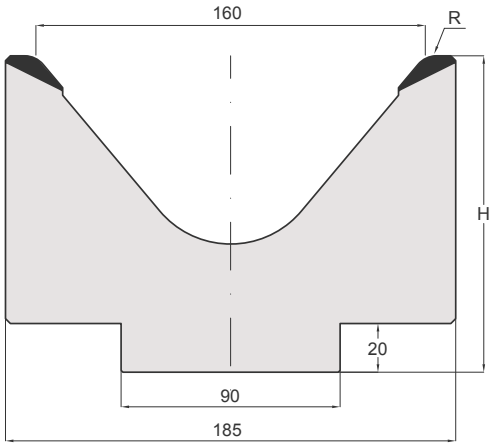

200 mm
415 mm
805 mm
SECTIONED

plses maquinaria y herramientas

CODE	α	V	R	H	T/Mt	Mt
21.125	80°	125	9.00	103.00	150	

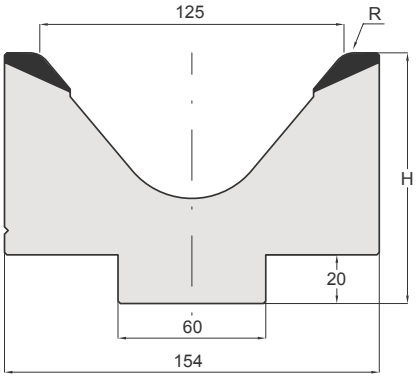

200 mm
415 mm
805 mm
SECTIONED

CODE	α	V	R	H	T/Mt	Mt
21.160	80°	160	10.00	130.00	150	

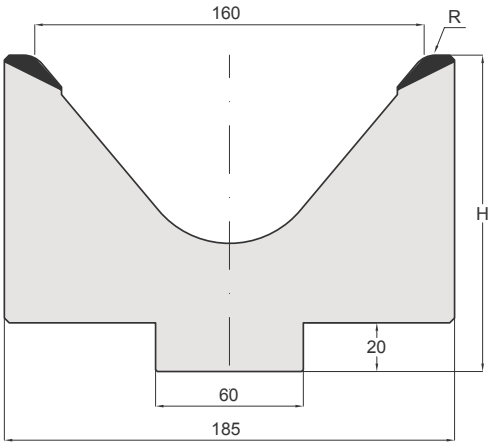

200 mm
415 mm
805 mm
SECTIONED

CODE	α	V	R	H	T/Mt	Mt
21.200	70°	200	15.00	185.00	200	

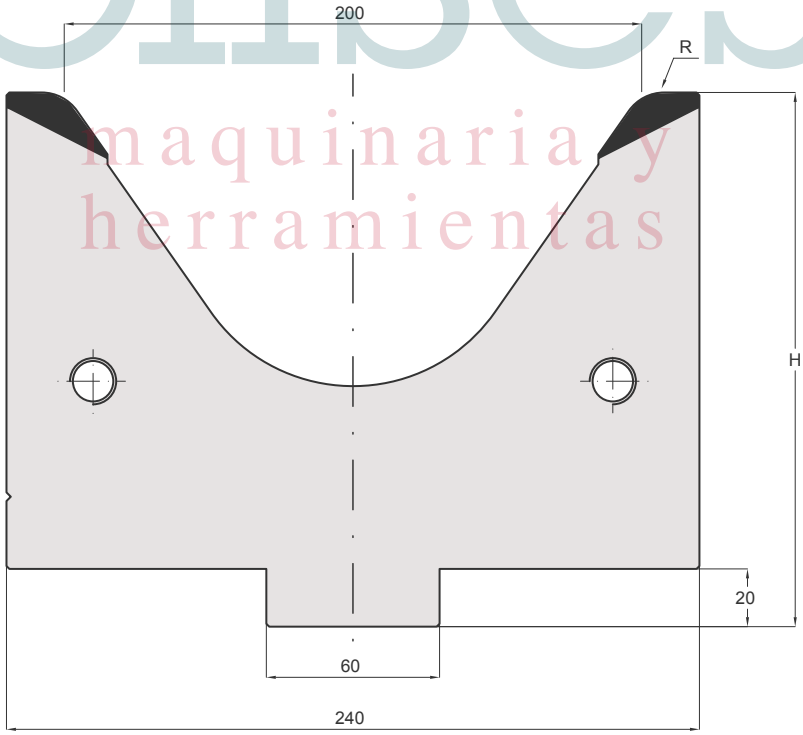

200 mm
415 mm

pilses® maquinaria y herramientas

MATRICI / DIES AMADA - PROMECAM STYLE H=80

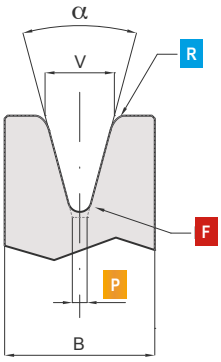

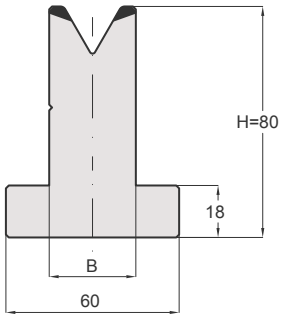

415 mm | 835 mm | 805 mm SECTIONED

LE MATRICI STANDARD SONO DISPONIBILI A MAGAZZINO NELLE LUNGHEZZE DI: 415 mm - 835 mm E FRAZIONATI (805 mm)

THE DIES ARE AVAILABLE IN THE FOLLOWING STANDARD LENGTHS: 415 mm - 835 mm AND SECTIONED (805 mm)

LEGENDA	α = ANGOLO	V = AMPIEZZA CAVA	R = RAGGIO	H = ALTEZZA	B = STELO	F = FONDO MATRICE	P = PIANO
LEGEND	α = ANGLE	V = DIE OPENING	R = RADIUS	H = HEIGHT	B = BODY	F = BOTTOM DIE	P = FLAT

CODE	α	V	R	H	B	F	T/mt	Mt
20.806	88°	6	0.80	80	14	R0.5	100	
20.808	88°	8	1.00	80	14	R0.5	100	
20.810	88°	10	1.20	80	18	R0.5	100	
20.371	88°	12	1.50	80	18	R0.5	100	
20.327	88°	16	2.00	80	24	R0.5	100	
20.310	88°	20	2.00	80	30	R1.0	100	
20.309	88°	25	3.00	80	35	R1.0	100	
20.506	85°	6	1.50	80	14	R0.5	100	
20.508	85°	8	2.00	80	14	R0.5	100	
20.510	85°	10	2.50	80	18	R0.5	100	
20.512	85°	12	3.00	80	18	R0.5	100	
20.516	85°	16	3.50	80	24	R0.5	100	
20.520	85°	20	4.00	80	30	R1.0	100	
20.525	85°	25	5.00	80	35	R1.0	100	
20.297	60°	6	0.40	80	14	R0.5	60	
20.298	60°	8	0.50	80	14	R0.5	60	
20.299	60°	10	0.60	80	18	R0.5	60	
20.300	60°	12	0.80	80	18	R0.5	60	
20.301	60°	16	1.60	80	24	R0.7	60	
20.308	60°	20	2.00	80	30	R1.0	60	
20.311	60°	25	3.00	80	35	R1.0	60	
20.328	45°	6	0.60	80	14	R0.8	50	
20.329	45°	8	0.80	80	18	R0.8	50	
20.330	45°	10	1.00	80	18	R0.8	50	
20.331	45°	12	1.50	80	24	R0.8	50	
20.332	45°	16	2.00	80	24	R1.5	50	
20.333	45°	20	2.50	80	30	R1.5	50	
20.334	45°	25	3.00	80	35	R1.5	50	
20.406	35°	6	1.50	80	14	R1.0	40	
20.408	35°	8	2.00	80	18	P2.0	40	
20.410	35°	10	2.50	80	24	P2.0	55	
20.412	35°	12	3.00	80	24	P2.0	45	
20.416	35°	16	3.50	80	30	P2.0	50	
20.420	35°	20	4.00	80	35	P5.0	60	
20.425	35°	25	5.00	80	40	P5.0	60	
20.317	30°	6	0.60	80	14	R1.0	35	
20.318	30°	8	0.80	80	18	P2.0	35	
20.319	30°	10	1.00	80	24	P2.0	50	
20.320	30°	12	1.50	80	24	P2.0	40	
20.321	30°	16	2.00	80	30	P5.0	45	
20.322	30°	20	2.50	80	35	P5.0	50	
20.323	30°	25	3.00	80	40	P5.0	50	

pilses® maquinaria y herramientas

MATRICI / DIES AMADA - PROMECAM STYLE H=120

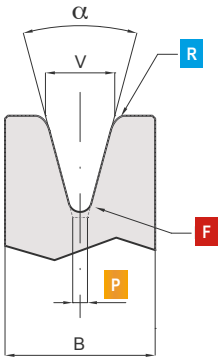

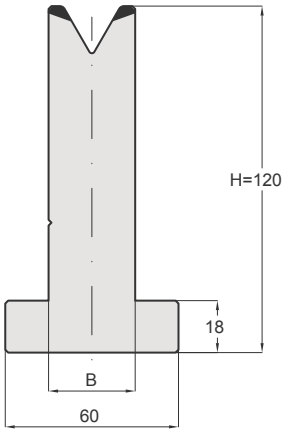

415 mm | 835 mm | 805 mm SECTIONED

LE MATRICI STANDARD SONO DISPONIBILI A MAGAZZINO NELLE LUNGHEZZE DI: 415 mm - 835 mm E FRAZIONATI (805 mm)

THE DIES ARE AVAILABLE IN THE FOLLOWING STANDARD LENGTHS: 415 mm - 835 mm AND SECTIONED (805 mm)

LEGENDA	α = ANGOLO	V = AMPIEZZA CAVA	R = RAGGIO	H = ALTEZZA	B = STELO	F = FONDO MATRICE	P = PIANO
LEGEND	α = ANGLE	V = DIE OPENING	R = RADIUS	H = HEIGHT	B = BODY	F = BOTTOM DIE	P = FLAT

CODE	α	V	R	H	B	F	T/mt	Mt
21.806	88°	6	0.80	120	14	R0.5	100	
21.808	88°	8	1.00	120	14	R0.5	100	
21.810	88°	10	1.20	120	18	R0.5	100	
20.382	88°	12	1.50	120	18	R0.5	100	
20.383	88°	16	2.00	120	24	R0.5	100	
20.384	88°	20	2.00	120	30	R1.0	100	
20.385	88°	25	3.00	120	35	R1.0	100	
21.506	85°	6	1.50	120	14	R0.5	100	
21.508	85°	8	2.00	120	14	R0.5	100	
21.510	85°	10	2.50	120	18	R0.5	100	
21.512	85°	12	3.00	120	18	R0.5	100	
21.516	85°	16	3.50	120	24	R0.5	100	
21.520	85°	20	4.00	120	30	R1.0	100	
21.525	85°	25	5.00	120	35	R1.0	100	
20.386	60°	6	0.40	120	14	R0.5	60	
20.387	60°	8	0.50	120	14	R0.5	60	
20.388	60°	10	0.60	120	18	R0.5	60	
20.389	60°	12	0.80	120	18	R0.5	60	
20.390	60°	16	1.60	120	24	R0.7	60	
20.391	60°	20	2.00	120	30	R1.0	60	
20.392	60°	25	3.00	120	35	R1.0	60	
20.393	45°	6	0.60	120	14	R0.8	50	
20.394	45°	8	0.80	120	18	R0.8	50	
20.395	45°	10	1.00	120	18	R0.8	50	
20.396	45°	12	1.50	120	24	R0.8	50	
20.397	45°	16	2.00	120	24	R1.5	50	
20.398	45°	20	2.50	120	30	R1.5	50	
20.399	45°	25	3.00	120	35	R1.5	50	
21.406	35°	6	1.50	120	14	R1.0	40	
21.408	35°	8	2.00	120	18	P2.0	40	
21.410	35°	10	2.50	120	24	P2.0	55	
21.412	35°	12	3.00	120	24	P2.0	45	
21.416	35°	16	3.50	120	30	P2.0	50	
21.420	35°	20	4.00	120	35	P5.0	60	
21.425	35°	25	5.00	120	40	P5.0	60	
20.351	30°	6	0.60	120	14	R1.0	35	
20.352	30°	8	0.80	120	18	P2.0	35	
20.353	30°	10	1.00	120	24	P2.0	50	
20.354	30°	12	1.50	120	24	P2.0	40	
20.401	30°	16	2.00	120	30	P5.0	45	
20.402	30°	20	2.50	120	35	P5.0	50	
20.403	30°	25	3.00	120	40	P5.0	50	

pilses® maquinaria y herramientas

MATRICI / DIES AMADA - PROMECAM STYLE 2V H=26 / H=46

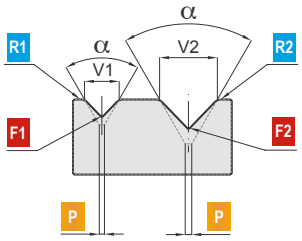

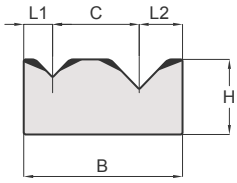

415 mm | 835 mm

LE MATRICI STANDARD SONO DISPONIBILI A MAGAZZINO NELLE LUNGHEZZE DI: 415 mm - 835 mm (NON FRAZIONABILE)
THE DIES ARE AVAILABLE IN THE FOLLOWING STANDARD LENGTHS: 415 mm - 835 mm (NOT SECTIONABLE)

LEGENDA	α = ANGOLO	V = AMPIEZZA CAVA	R1 / R2 = RAGGIO	H = ALTEZZA	B = STELO	F1 / F2 = FONDO MATRICE	P = PIANO
LEGEND	α = ANGLE	V = DIE OPENING	R1 / R2 = RADIUS	H = HEIGHT	B = BODY	F1 / F2 = BOTTOM DIE	P = FLAT

CODE	α	V1	V2	R1	R2	F1	F2	L1	L2	H	B	C	T/Mt	Mt
21.202	88°	6	10	0.80	1.20	R0.5	R0.5	6	10	26	55	39	100	
20.338	88°	8	12	1.00	1.50	R0.5	R0.5	8	10	26	55	37	100	
20.204	88°	12	20	2.75	3.00	R0.5	R0.5	10	15	26	55	30	100	
20.296	88°	14	18	2.75	3.00	R0.5	R0.5	11	13	26	55	31	100	
20.205	88°	16	25	2.75	3.00	R0.5	R0.5	12	16.5	26	55	26.5	100	
20.235	60°	6	10	0.40	0.60	R0.5	R0.5	6	10	26	55	39	60	
20.229	60°	8	12	0.50	0.80	R0.5	R0.5	8	10	26	55	37	60	
20.230	60°	12	20	0.80	1.50	R0.5	R0.5	10	15	26	55	30	60	
20.267	60°	16	20	1.60	2.00	R0.7	R0.7	12	15	26	55	28	60	
20.418	30°	8	12	0.80	1.50	P2.0	P2.0	9.5	14.5	46	50	26	40	

plses® maquinaria y herramientas

SUPPORTI MATRICE / DIE HOLDERS AMADA - PROMECAM STYLE

CODE	H1	H2	T/Mt	Mt
20.200	34.00	20.00	100	

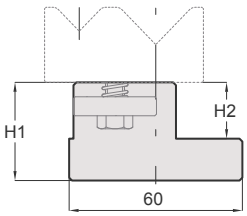

412 mm
830 mm

CODE	H1	H2	T/Mt	Mt
20.201	55.00	35.00	100	

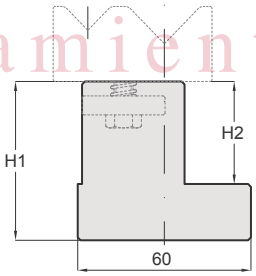

412 mm
830 mm

CODE	H1	H2	T/Mt	Mt
20.306	75.00	55.00	100	

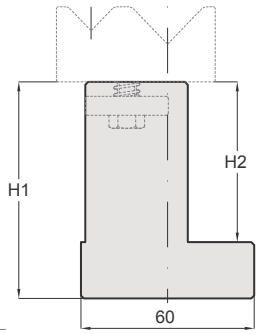

412 mm
830 mm

CODE	H1	H2	T/Mt	Mt
20.316	39.00	20.00	100	

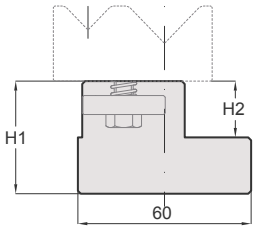

412 mm
830 mm

SCHEMA DI MONTAGGIO
ASSEMBLY SCHEME

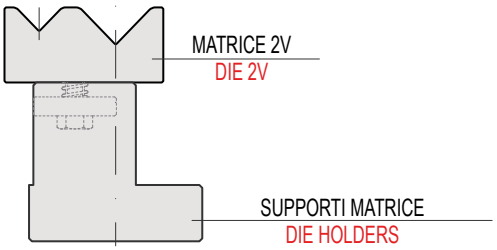

NON FRAZIONABILE
NOT SECTIONABLE

MATRICI / DIES AMADA - PROMECAM STYLE 2V H=46

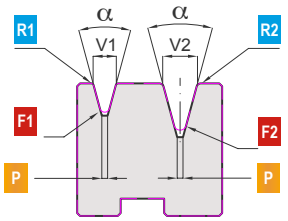

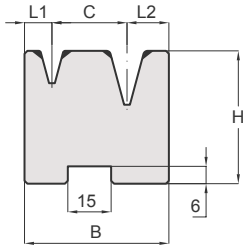

415 mm | 835 mm | 805 mm SECTIONED

LE MATRICI STANDARD SONO DISPONIBILI A MAGAZZINO NELLE LUNGHEZZE DI: 415 mm - 835 mm E FRAZIONATI (805 mm)
THE DIES ARE AVAILABLE IN THE FOLLOWING STANDARD LENGTHS: 415 mm - 835 mm AND SECTIONED (805 mm)

LEGENDA	α = ANGOLO	V = AMPIEZZA CAVA	R1 / R2 = RAGGIO	H = ALTEZZA	B = STELO	F1 / F2 = FONDO MATRICE	P = PIANO
LEGEND	α = ANGLE	V = DIE OPENING	R1 / R2 = RADIUS	H = HEIGHT	B = BODY	F1 / F2 = BOTTOM DIE	P = FLAT

CODE	α	V1	V2	R1	R2	F1	F2	L1	L2	H	B	C	T/Mt	Mt
21.275	88°	4	7	0.60	1.00	R0.5	R0.5	3.50	5.00	46	34.5	26	80	
21.276	88°	6	10	0.80	1.20	R0.5	R0.5	4.50	6.50	46	37	26	80	
20.339	88°	8	12	1.00	1.50	R0.5	R0.5	5.50	7.50	46	39	26	80	
20.279	88°	12	20	0.80	1.75	R0.5	R0.5	7.50	12.00	46	45.5	26	80	
20.278	88°	14	18	1.25	1.50	R0.5	R0.5	8.50	10.50	46	45	26	80	
20.280	88°	16	25	1.50	1.75	R0.5	R0.5	9.50	14.50	46	50	26	80	
20.344	85°	4	7	0.60	1.00	R0.5	R0.5	3.50	5.00	46	34.5	26	80	
20.345	85°	6	10	1.00	1.50	R0.5	R0.5	4.50	6.50	46	37	26	80	
20.346	85°	8	12	1.20	1.75	R0.5	R0.5	5.50	7.50	46	39	26	80	
20.347	85°	12	20	1.75	2.50	R0.5	R0.5	7.50	12.00	46	45.5	26	80	
20.349	85°	14	18	1.50	2.00	R0.5	R0.5	8.50	10.50	46	45	26	80	
20.348	85°	16	25	2.00	3.00	R0.5	R1.0	9.50	14.50	46	50	26	80	
20.438	30°	6	10	0.60	1.00	R1.0	P2.0	7.00	12.00	46	45	26	40	
20.478	30°	8	12	0.80	1.50	P2.0	P2.0	9.50	14.50	46	50	26	40	

SUPPORTI MATRICE / DIE HOLDERS AMADA - PROMECAM STYLE

CODE	H1	T/Mt	Mt
20.287	10.00	100	

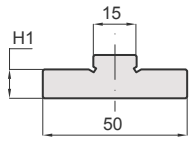

415 mm
835 mm

CODE	H1	T/Mt	Mt
20.400	20.00	100	

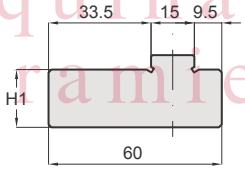

415 mm
835 mm

CODE	Mt
20.336	

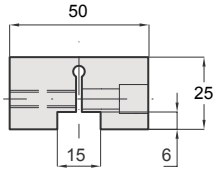

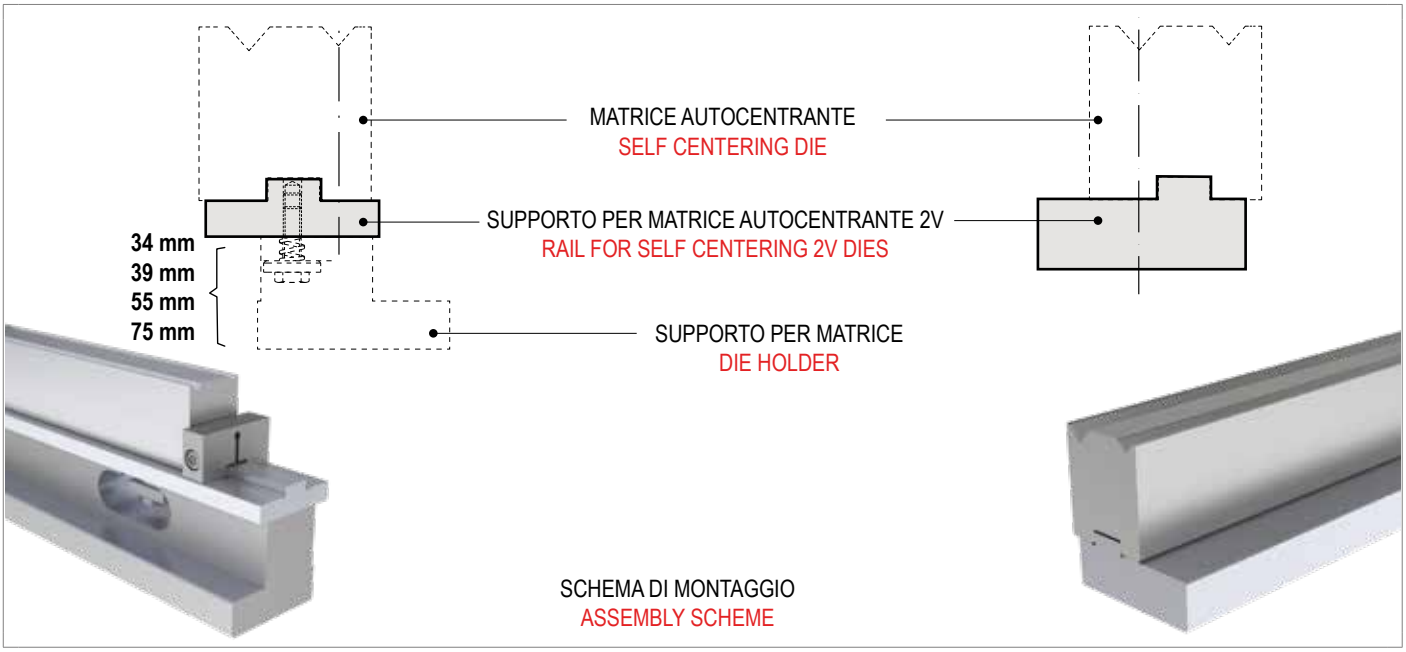

elses maquinaria y herramientas ®

BLOCCAGGIO STANDARD - 8 VITI
NORMAL LOCKING - 8 SCREWS

CODE	Mt
22.010	

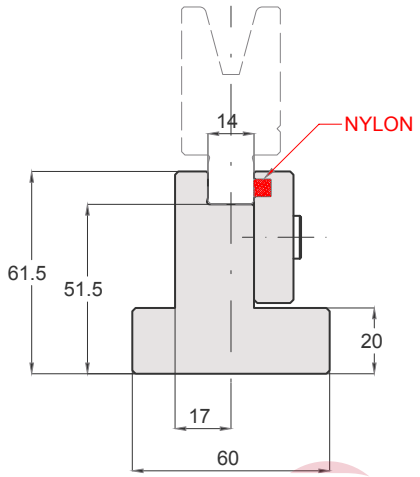

415 mm
835 mm

pilses® maquinaria y herramientas

BLOCCAGGIO VELOCE - 2 VITI
FAST LOCKING, 2 SCREWS

CODE	Mt
22.020	

NEW

BLOCCAGGIO RAPIDO
FAST LOCKING

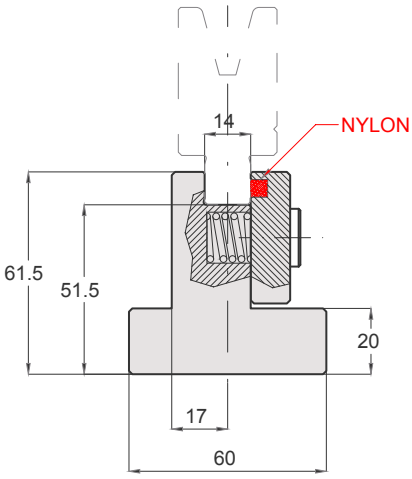

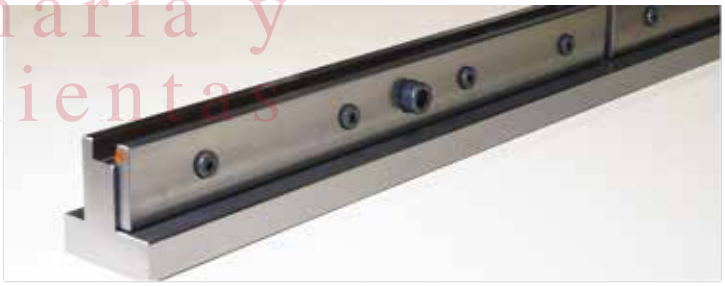

415 mm
835 mm

INSERTI MATRICE / DIE INSERTS AMADA - PROMECAM STYLE

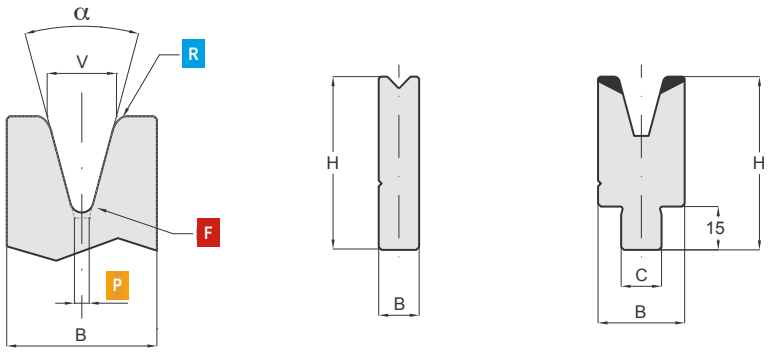

415 mm | 835 mm | 805 mm SECTIONED

LE MATRICI STANDARD SONO DISPONIBILI A MAGAZZINO NELLE LUNGHEZZE DI: 415 mm - 835 mm E FRAZIONATI (805 mm)
THE DIES ARE AVAILABLE IN THE FOLLOWING STANDARD LENGTHS: 415 mm - 835 mm AND SECTIONED (805 mm)

LEGENDA	α = ANGOLO	V = AMPIEZZA CAVA	R = RAGGIO	H = ALTEZZA	B = STELO	C = CODOLO	F = FONDO MATRICE	P = PIANO
LEGEND	α = ANGLE	V = DIE OPENING	R = RADIUS	H = HEIGHT	B = BODY	C = TANG	F = BOTTOM DIE	P = FLAT

CODE	α	V	R	H	B	C	F	T/mt	Mt
22.804	88°	4	0.60	60	14	14	R0.5	100	
22.806	88°	6	0.80	60	14	14	R0.5	100	
22.808	88°	8	1.00	60	14	14	R0.5	100	
22.810	88°	10	1.20	60	18	14	R0.5	100	
22.812	88°	12	1.50	60	18	14	R0.5	100	
22.816	88°	16	2.00	60	24	14	R0.5	100	
22.820	88°	20	2.00	60	30	14	R1.0	100	
22.825	88°	25	3.00	60	35	14	R1.0	100	
22.832	84°	32	4.00	60	38	14	R2.0	100	
22.840	84°	40	4.00	60	46	14	R2.0	100	
22.606	60°	6	0.60	60	12	14	R0.6	38	
22.608	60°	8	0.80	60	13.5	14	R0.8	45	
22.610	60°	10	1.00	60	16	14	R1.0	55	
22.612	60°	12	1.20	60	17	14	R1.0	55	
22.616	60°	16	1.60	60	22	14	R1.0	65	
22.620	60°	20	2.00	60	28	14	R1.0	85	
22.625	60°	25	2.50	60	31	14	R1.0	85	
22.432	45°	32	5.00	80	50	14	R5.0	100	
22.440	45°	40	5.00	80	60	14	R5.0	100	
22.306	30°	6	0.60	60	14	14	R1.0	35	
22.308	30°	8	0.80	60	18	14	P2.0	35	
22.310	30°	10	1.00	60	24	14	P2.0	50	
22.312	30°	12	1.50	60	24	14	P2.0	40	
22.316	30°	16	2.00	60	30	14	P5.0	45	
22.320	30°	20	2.50	60	35	14	P5.0	50	
22.325	30°	25	3.00	65	45	14	P8.0	50	

pilses® maquinaria y herramientas

pilsecs®
maquinaria y herramienta

AMADA - PROMECAM STYLE

PIEGASCHIACCIA

HEMMING TOOLS

pilses®
maquinaria y herramientas

RED LINE

AMADA - PROMECAM STYLE

MATRICI PIEGASCHIACCIA / HEMMING DIES *AMADA STYLE*

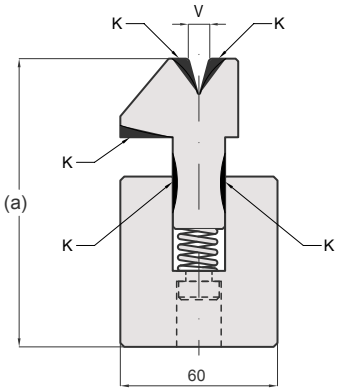

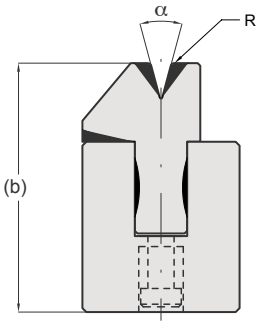

LEGENDA	(a) = APERTO	(b) = CHIUSO	(α) = ANGOLO	V = AMPIEZZA CAVA	R = RAGGIO	K = PARTI USURABILI
LEGEND	(a) = OPEN	(b) = CLOSED	(α) = ANGLE	V = DIE OPENING	R = RADIUS	K = WEAR PARTS

415 mm | 835 mm

CODE	α	V	R	T/Mt	Mt
20.264	35°	6	1.00	60	

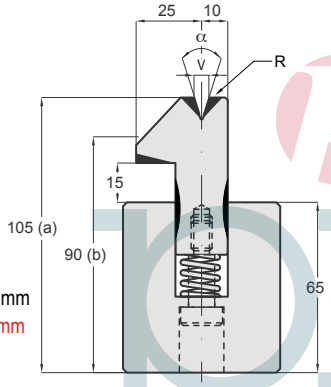

Max sp 1mm
Max tk 1mm
415 mm
835 mm

CODE	α	V	R	T/Mt	Mt
20.303	30°	8	1.50	80	

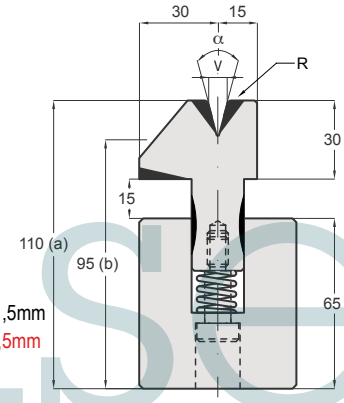

Max sp 1,5mm
Max tk 1,5mm
415 mm
835 mm

CODE	α	V	R	T/Mt	Mt
20.450	30°	8	1.50	60	

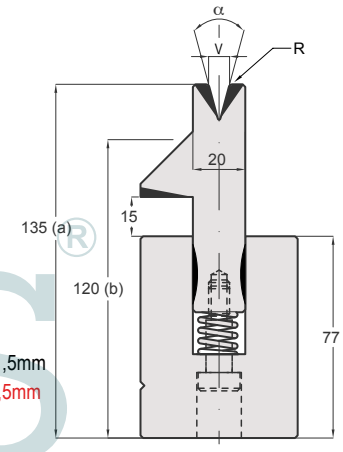

Max sp 1,5mm
Max tk 1,5mm
415 mm
835 mm

CODE	α	V	R	T/Mt	Mt
20.231	26°	10	1.50	100	

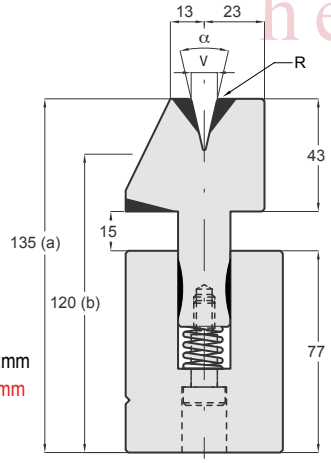

Max sp 2mm
Max tk 2mm
415 mm
835 mm

CODE	α	V	R	T/Mt	Mt
20.305	26°	12	3.00	100	

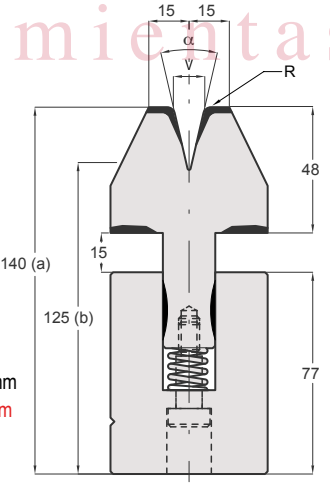

Max sp 3mm
Max tk 3mm
415 mm
835 mm

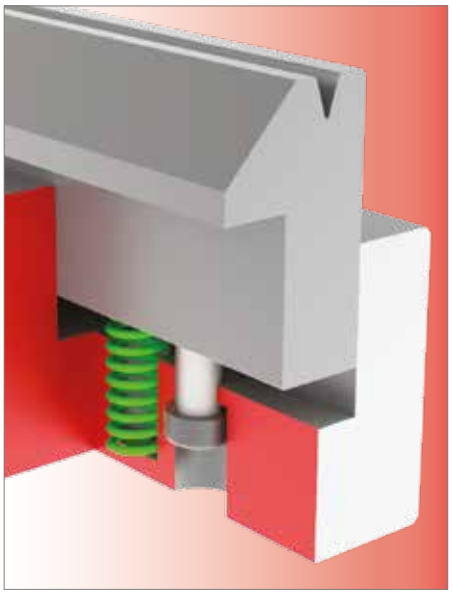

CODE
70.100

SPARE PARTS

CODE
70.102

SPARE PARTS

pulses maquinaria y herramientas

MATRICI PIEGASCHIACCIA PNEUMATICHE / PNEUMATIC HEMMING DIES AMADA STYLE

I PIEGASCHIACCIA PNEUMATICI SONO EQUIPAGGIATI CON CILINDRI AD ARIA, RICAVANDONE I SEGUENTI VANTAGGI:
A) RECUPERO DI 15 MM DI LUCE E DI CORSA CON CONSEGUENTE RIDUZIONE DEI TEMPI DI LAVORAZIONE.
B) MAGGIOR PRECISIONE DI PIEGA
C) MINOR USURA DEGLI UTENSILI
D) COLLEGAMENTO AL CNC

PNEUMATIC FLATTENING DIES ARE EQUIPPED WITH AIR CYLINDERS, GETTING THE FOLLOWING BENEFITS:
A) SAVING 15 MM LIGHT AND STROKE WITH REDUCTION OF WORKING TIME.
B) MORE PRECISE BENDING
C) LESS WEAR
D) CONNETABLE TO EXISTING FREE CONTROL-OUTPUT I/O

CODE	α	V	R	T/Mt	Mt
21.264	35°	6	1.00	60	

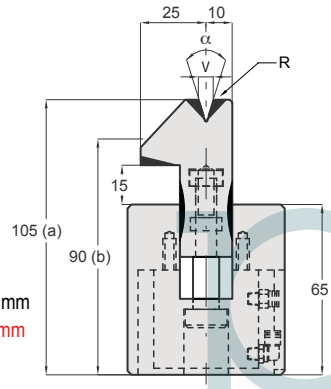

Max sp 1mm
Max tk 1mm
415 mm
835 mm

CODE	α	V	R	T/Mt	Mt
21.303	30°	8	1.50	80	

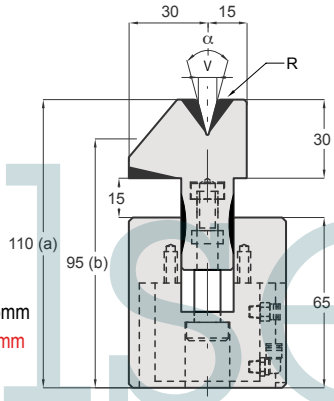

Max sp 1,5mm
Max tk 1,5mm
415 mm
835 mm

CODE	α	V	R	T/Mt	Mt
21.450	30°	8	1.50	60	

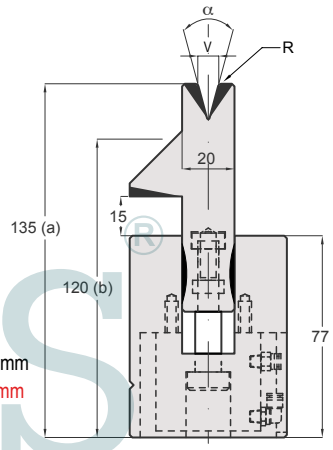

Max sp 1,5mm
Max tk 1,5mm
415 mm
835 mm

CODE	α	V	R	T/Mt	Mt
21.231	26°	10	1.50	100	

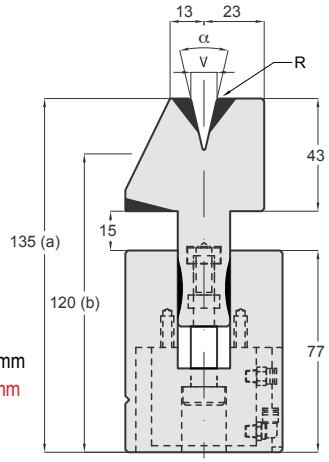

Max sp 2mm
Max tk 2mm
415 mm
835 mm

CODE	α	V	R	T/Mt	Mt
21.305	26°	12	3.00	100	

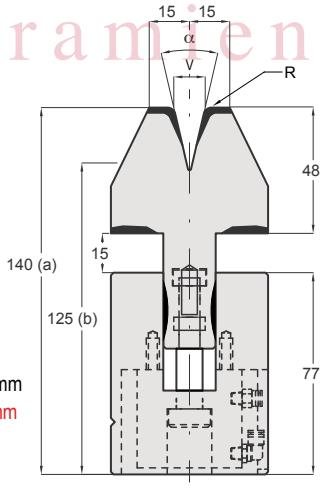

Max sp 3mm
Max tk 3mm
415 mm
835 mm

CODE
50.720

SPARE PARTS

CODE
70.121

SPARE PARTS

CODE
70.123

SPARE PARTS

CODE
70.120

SPARE PARTS

Polisés maquinaria y herramientas

PIEGASCHIACCIA / HEMMING TOOLS AMADA - PROMECAM STYLE

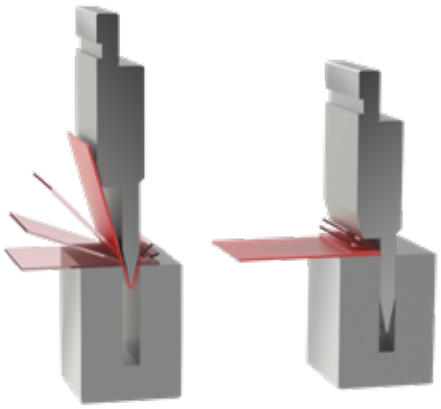

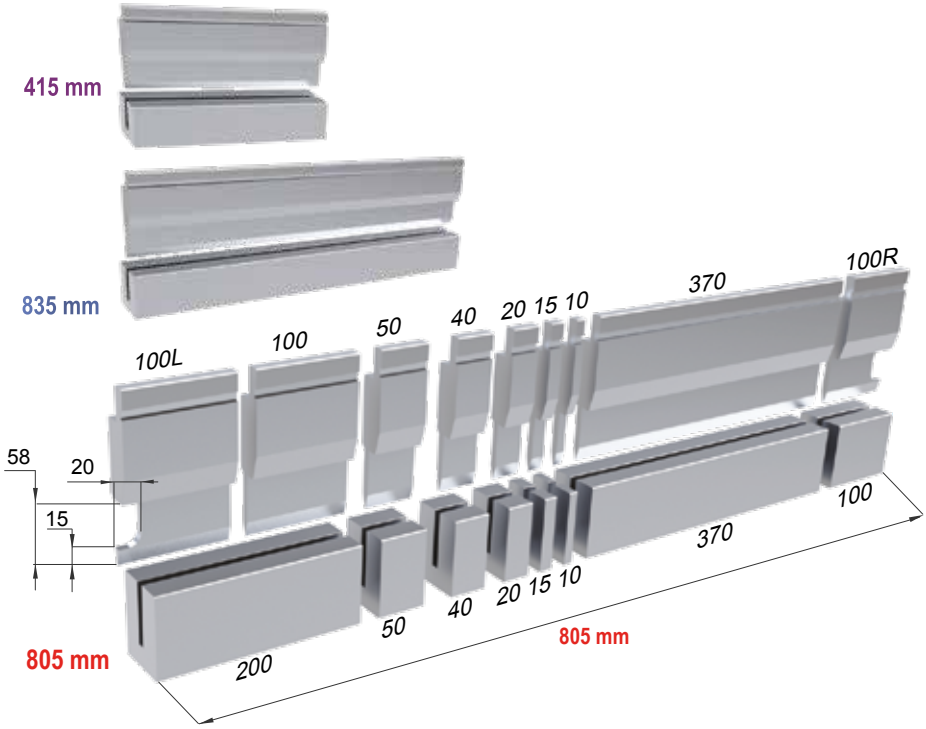

IL CARICO MASSIMO DELLE SCARPETTE CORRISPONDE AL 50% DEL CARICO MASSIMO INDICATO SUL PUNZONE.
THE MAX LOAD OF THE HORN EXTENSIONS IS 50% OF THE MAX LOAD OF THE PUNCH.

olises maquinaria y herramientas ®

MATERIAL ACC.R ~ 40 Kg/MM²

MATERIAL ACC.R ~ 40 Kg/MM²				
S (mm)	(t/m)	T (mm)	(t/m)	2S(mm)
0,6	9	3	23	1,2
0.8	12	3	32	1,6
1,0	15	3,5	40	2,0
1,25	17	3,5	50	2,5
1,5	22	4,6	63	3,0
2,0	30	5,5	80	4,0
2,5	55	6,5	90	5,0
3,0	70	8,0	100	6,0

MATERIAL ACC.R ~ 70 Kg/MM²

MATERIAL ACC.R ~ 70 Kg/MM²				
S (mm)	(t/m)	T (mm)	(t/m)	2S(mm)
0,6	15	3	35	1,2
0.8	20	3	50	1,6
1,0	25	3,5	60	2,0
1,25	26	3,5	80	2,5
1,5	38	4,6	95	3,0
2,0	50	5,5	130	4,0

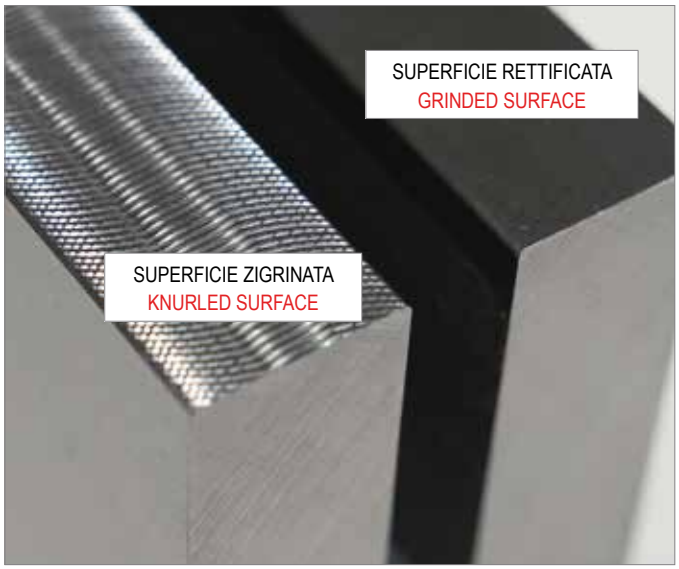

CODE	α	R	H	T/Mt	Mt
11.550	24°	0.60	128.00	80	

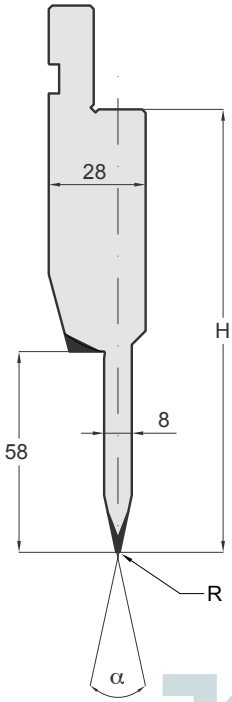

415 mm
835 mm
805 mm
SECTIONED

CODE	α	R	H	T/Mt	Mt
11.554	24°	0.60	128.00	80	

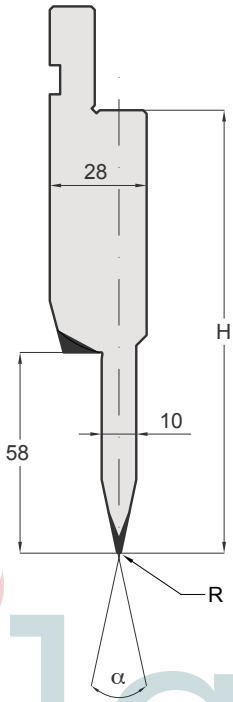

415 mm
835 mm
805 mm
SECTIONED

CODE	α	R	H	T/Mt	Mt
11.560	24°	0.60	128.00	80	

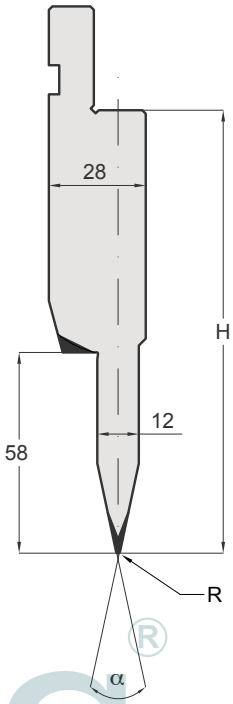

415 mm
835 mm
805 mm
SECTIONED

CODE	R	H	T/Mt	Mt
20.550	1.00	80.00	50	

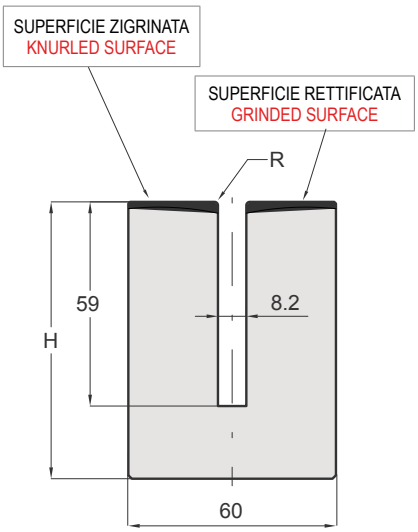

415 mm
835 mm
805 mm
SECTIONED

Max sp 1mm
Max tk 1mm

CODE	R	H	T/Mt	Mt
20.554	1.00	80.00	50	

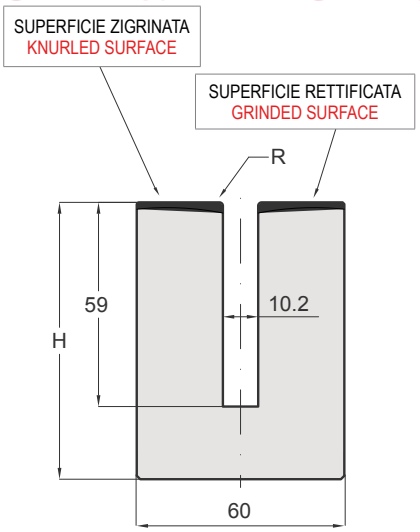

415 mm
835 mm
805 mm
SECTIONED

Max sp 1,5mm
Max tk 1,5mm

CODE	R	H	T/Mt	Mt
20.560	1.00	80.00	50	

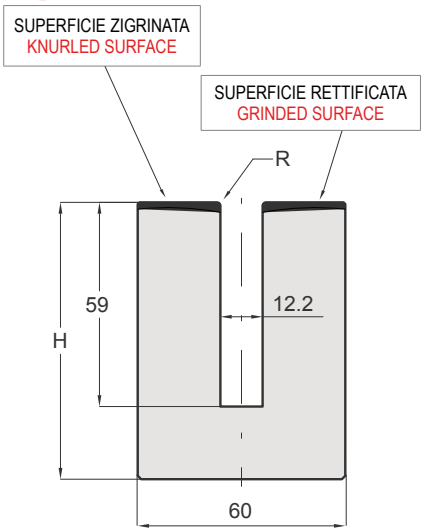

415 mm
835 mm
805 mm
SECTIONED

Max sp 2mm
Max tk 2mm

plses® maquinaria y herramientas

pilses®
maquinaria y herramienta